Manitowoc MLC650

Product Guide

ASME B30.5
Metric

Preliminary

Features

- 650 t capacity
- 3,887 t-m maximum load moment
- 9,052 t-m maximum load moment with VPC-MAX
- 104 m No. 680 boom
- 30 m No. 148 fixed jib on No. 680 boom
- 101 m No. 681-682 luffing jib on No. 680 boom

Variable Position Counterweight

The Variable Position Counterweight (VPC) is proprietary technology available exclusively on Manitowoc crawler cranes. By allowing the crane's counterweight to be positioned automatically, the VPC provides an unmatched level of versatility and lifting capability.

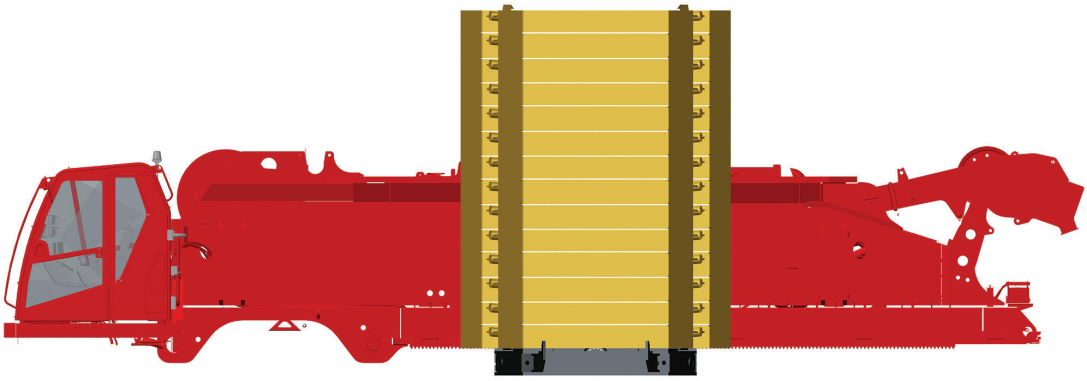

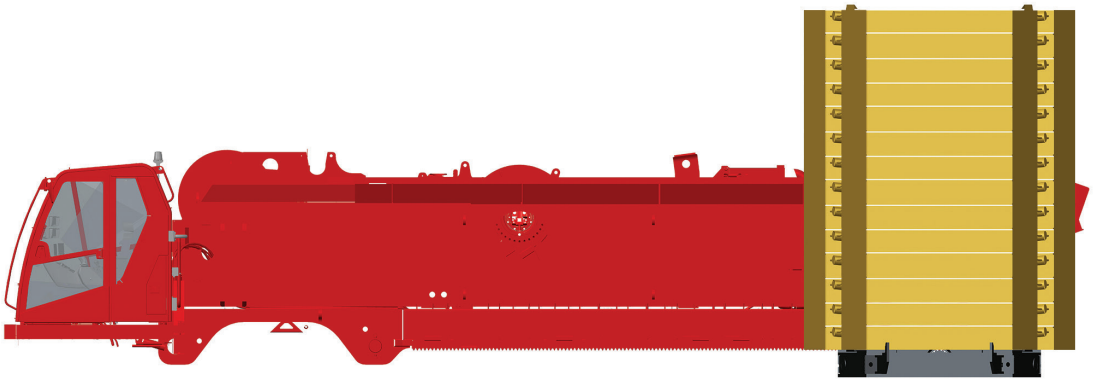

Jobsite benefits

Reduced ground bearing pressure

Moving counterweight allows counterweight to be positioned to better distribute ground bearing pressure during setup and lifting operations.

Less counterweight without sacrificing capacity

The VPC technology allows the upperworks counterweight to move based on stability requirements, eliminating the need for carbody counterweights. The weight typically added to the carbody can now be added to the upperworks to increase capacity while retaining performance and on-site mobility.

VPC–MAX *(option)*

Unlike VPC counterweight movement which is dictated by changes in boom angle, VPC-MAX counterweight movement is dictated by load and radius (forward moment) changes. As forward moment is increased or decreased VPC-MAX counterweight position is changed to offset changes in moment.

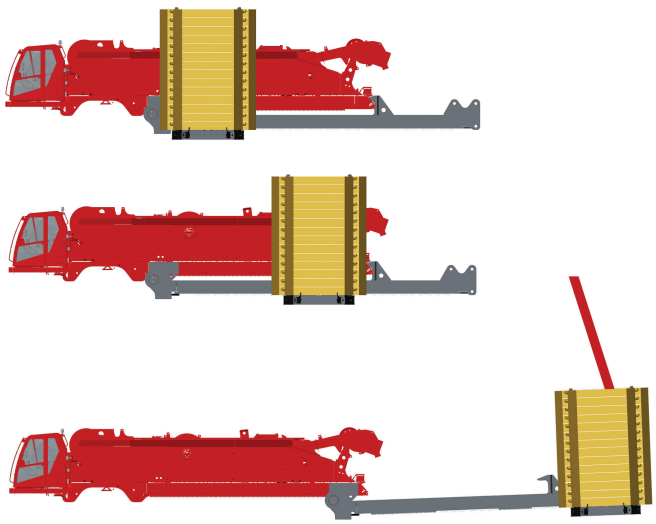

In VPC-MAX configuration, the counterweight tray moves to the end of the VPC-MAX beam prior to beam extension, thus minimizing tailswing and increasing job site mobility.

Counterweight is automatically positioned to optimize rearward moment as forward moment is increased or decreased.

Minimal ground preparation

In VPC-MAX configuration the counterweight assembly never touches the ground, allowing for minimal ground preparation. The MLC650 ground preparation area is approximately one-tenth of that required by the leading competition, saving time and cost during job site preparation.

Ground prep area comparison

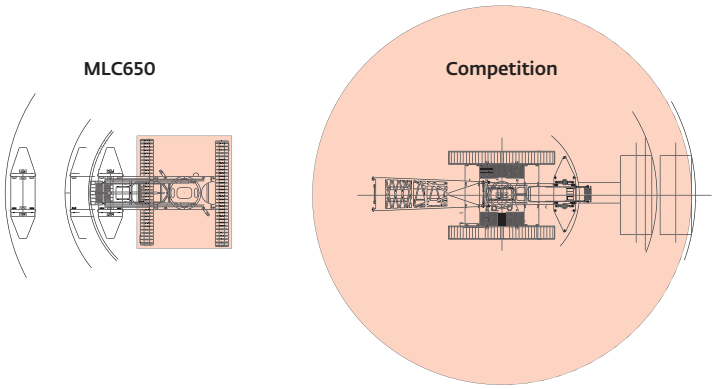

Water applications

Counterweight never touches ground allowing use in barge applications where wheeled or hanging attachments that contact the operating surface are typically not allowed. Moving counterweight also better maintains center of gravity for reduced ground bearing pressures.

Features

Crane Control System

The Crane Control System offers a user-friendly interface, two full graphic displays mounted horizontally for better visibility, a jog dial for easier data input and ergonomic joysticks.

Variable Position Counterweight (VPC)

The Manitowoc MLC650 features a counterweight system which automatically positions the crane's counterweight as required to match lifting demands. Crane lifting capability is optimized by automatic positioning of the counterweight; eliminating the need for carbody counterweight. Additionally, counterweight boxes are designed to be common across multiple crane platforms and will be utilized on Manitowoc Model MLC300 as well as future new models.

VPC-MAX

Capacity and boom and jib combination lengths can be increased through addition of the exclusive VPC-MAX attachment. The VPC-MAX attachment, utilizing all of the standard VPC components, increases the max load moment of the MLC650 when a 36 m fixed mast, VPC-MAX counterweight beam and additional 100 t of counterweight is added to the base MLC650. The position of the VPC-MAX counterweight is automatically positioned based on lifted load, boom length or boom and jib length and load radius.

Transport

The MLC650 is designed to be transported globally with optimized component weights and dimensions. The MLC650 features a removable live mast shipping module and boom inserts designed to allow luffing jib inserts to ship within the boom inserts for cost effective transport.

FACT™ Connectors

Manitowoc's Fast Aligning Connection Technology (FACT) automatically aligns crane components for fast, easy assembly.

Contents

Specifications	6
Outline dimensions	9
Transport data	17
Assembly	18
Performance data	20
Boom combinations	22
Main boom range / load charts	25
Extended UBP range / load charts	27
Luffing jib range / load charts	29
VPC-MAX complete information	33
Manitowoc Crane Care	43

Specifications

Upperworks

Engine

Cummins Model QSX15 Tier 4 Final diesel, 447 KW at 1800 RPM.

Or

Cummins QSX15 Tier 3 diesel, rated 447 KW at 1800 RPM

Includes pump drive disconnect for easier starting, engine block heater (240V), high silencing muffler or emissions compliant Tier 4 Final after treatment, hydraulic oil cooler, radiator and variable speed hydraulic controlled fan. Variable speed fan provides increased fuel efficiency, decreased engine loading and reduces noise emission.

Multiple hydraulic pump drive transmission provides power for all machine functions. Two 12 volt, 1375 CCA at -18° C, 24 volt system and 110 amp alternator. 1117 L fuel tank, with level indicator in operator's cab.

- Optional: Cold-weather package with heater for fluids.

Crane Control System

The Crane Control System offers a user-friendly interface, two full graphic displays mounted horizontally for better visibility, a jog dial for easier data input and ergonomic joysticks.

Hydraulic system

High-pressure piston pumps, driven by a multi-pump transmission, provide independent closed-loop hydraulic power for the hoisting drums, boom hoist, swing, left crawler and right crawler.

946 L hydraulic reservoir is equipped with breather, clean out access, and internal diffuser.

Each function is equipped with relief valves to protect the hydraulic circuit from overload or shock.

System includes oil cooler and replaceable, full flow return filters. All oil is filtered before entering the hydraulic reservoir.

Drums

Basic machine is equipped with 1248 mm wide and 660 mm diameter main hoist drum, mounted in the boom butt and 813 mm wide and 641 mm diameter whip drum, mounted in the rotating bed. Each drum is driven by a variable-displacement hydraulic motor through a planetary reduction system. Main hoist drum is grooved for 32mm rope and whip drum is grooved for 28 mm rope.

Powered hoisting/lowering operation is standard with automatic (spring applied, hydraulically released) multi-disc brakes, and drum rotation indicators

- Optional: auxiliary main hoist with 1248 mm wide and 660 mm diameter mounted in the 4 m insert. Aux main hoist drum is grooved for 32 mm rope.

Moving mast system

Independent moving mast hoist with two grooved drums, each 470 mm wide and 787 mm diameter drum grooved for 32 mm diameter wire rope.

Drum is powered by variable-displacement hydraulic motors coupled to integral brake and planetary reduction gearboxes. Ratcheting pawl and rotation indicator are standard.

Raise 104 m full main boom from 0° - 85° in 7 minutes 40 seconds.

Swing system

High strength steel adapter module is mounted on 3 m diameter triple row roller turntable bearing. Bearing adapter-mounted independent swing is powered by two fixed-displacement hydraulic motors coupled to internal brakes and planetary reductions.

Swing system maximum speed: 1.3 rpm liftcrane, 0.9 rpm VPC-MAX.

Boom support system

Moving mast is 11 m long and connects the boom hoist reeving to the steel boom suspension strap rigging. When used with the optional self-erect package, the mast is used for crane assembly and disassembly. It is capable of lifting and positioning the crawler assemblies, and assembling the boom and luffing jib.

Spring cushioned boom stop and automatic boom stop are standard.

Variable Position Counterweight

The Variable Position Counterweight (VPC) system of rotating bed only counterweight maintains optimum crane stability by automatically positioning crane counterweight based on boom angle and length. No carbody counterweight is required.

The crane is equipped with 300 t upperworks only counterweight made up of a single piece counterweight tray and twenty-eight 10 t counterweight boxes. Left and right side counterweights are interchangeable and common with MLC300 counterweight.

Vision operator's cab

The Vision Cab™ is a fully enclosed and insulated galvannealed steel fabricated module mounted to the left front corner of rotating bed. Operator's cab is equipped with power tilt, sliding door, large safety glass windows, front and roof windshield wipers, dome light, sun visor and shade, fire extinguisher, air conditioning, swing and travel alarms, and radio/CD player. Operator's station swings over front of rotating bed for transportation.

- Optional: Polyethylene protective window covers.

Lowerworks

Carbody and adapter assembly

Connects rotating bed and crawler frames. Each frame is mounted to the carbody with FACT connection system and hydraulic power-actuated pins. Crawler drive motors are mounted on carbody, permitting crawler removal without opening travel drive hydraulic circuit.

Crawlers

Crawler assemblies are 11,1 m long with 1520 mm wide cast steel crawler pads and automatically lubricated intermediate rollers. Left and right side crawlers are interchangeable to provide assembly/disassembly flexibility on job sites. Carbody mounted drive motors are connected to crawler final reduction via drive shafts. Crawlers provide ample tractive effort for travel and counter-rotating with full rated load.

Maximum ground speed of 1,3 Kph.

- Optional: 2000 mm wide cast steel crawler pads

Attachments

No. 680 boom

The liftcrane is equipped with 32 m 680 basic boom consisting of 6 m butt, 4 m insert, 12 m insert with luffing hoist sheaves, and 10 m top with sixteen 762 mm diameter tapered roller bearing sheaves. Includes rope guides, boom hoist wire rope, boom angle indicator and hook and weight ball. The boom utilizes Manitowoc's exclusive FACT™ connection system boom connector. Spring cushioned boom stop. Automatic boom stop.

- Optional: 6 m and 12 m No. 680 boom inserts with steel boom suspension straps and FACT connection system.
- Optional: detachable upper boom point with one 762 mm diameter tapered roller bearing steel sheave grooved for 32 mm rope with rope guard for liftcrane.
- Optional: Heavy-duty 132,8 t detachable extended upper boom point with three 762 mm diameter tapered roller bearing steel sheave grooved for 32 mm rope with rope guard for liftcrane.

Specifications

No. 681-682 luffing jib

26 m basic No. 681-682 luffing jib including 6 m butt, one 12 m insert, 6 m transition insert and 2 m top, main and jib struts, jib and backstay steel suspension straps, boom point guide wheel, luffing jib hoist with ratchet and pawl; quick disconnect for jib hoist piping, and 28 mm luffing jib hoist line.

- Optional: 3 m, 6 m and 12 m No. 681 and 682 luffing jib inserts with steel boom suspension straps.

Utilize luffing jib inserts in combination with the No. 681-682 basic luffing jib for total luffing jib lengths up to 101 m.

No. 148 fixed jib

12 m No. 148 fixed jib including pin 6 m butt, 6 m top, jib strut and mounting hardware.

- Optional: 6 m No. 148 inserts with pin connectors and pendants for a maximum jib length of 30 m.

VPC-MAX

The VPC-MAX attachment components include:

- 36 m of No. 684 mast consisting of a 6 m butt, (2) 12 m inserts, and a 6 m top.
- One additional swing drive (for a total of three) mounted on the rotating module. Each swing drive is powered by a fixed-displacement hydraulic motor coupled to a planetary reduction gearbox and internal brake.
- Counterweight includes an additional ten 10 t boxes.

The VPC-MAX system maintains optimum crane stability by automatically positioning crane counterweight behind the crane's centerline of rotation based on lifted load, boom length and load radius.

Optional equipment

- Self-erect system includes, jacking cylinders with pads, self assembly cylinder and crawler handling chains.
- Hydraulic Test Kit: required to properly analyze the performance of the CCS.
- Service Interval Kits for the regularly scheduled maintenance of general crane operations.
- Special paint color(s) other than Manitowoc standard red and black.
- Custom vinyl decal(s) of customer name and/or logo from artwork supplied by customer.
- 22,2 t swivel hook and weight ball.

Outline dimensions

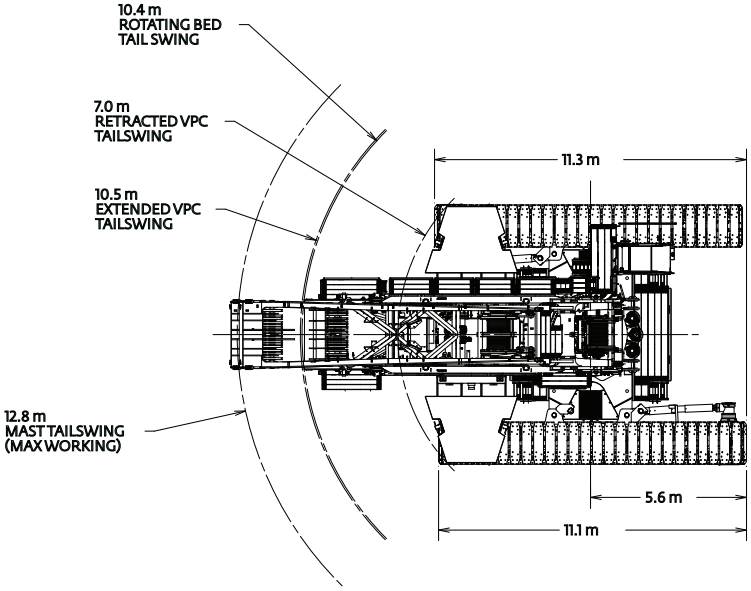

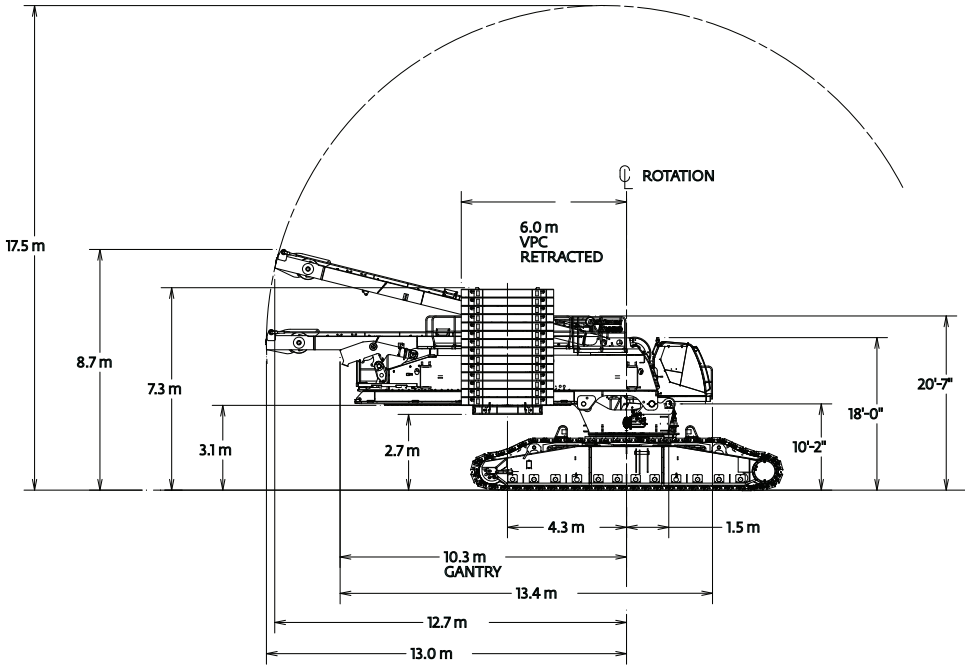

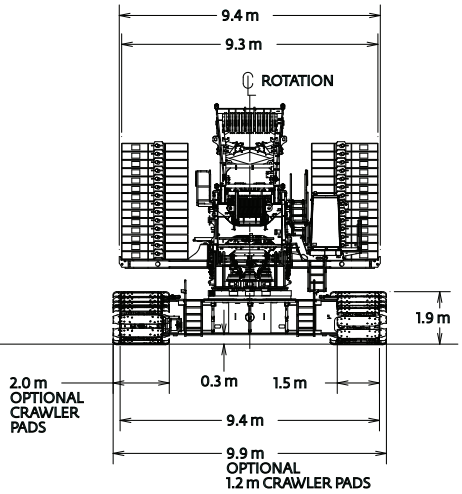

Outline dimensions

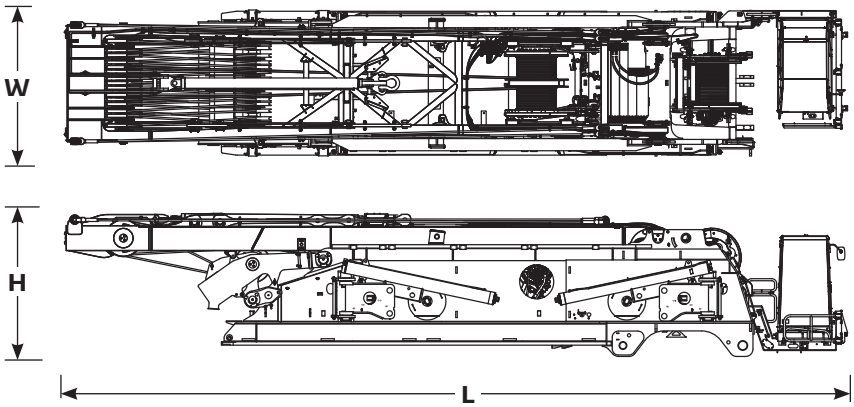

Rotating bed assembly	
Length	16,08 m
Width	3,00 m
Height	2,95 m
Weight	71 600 kg

Note: includes live mast, boom hoist, gantry, rotating bed jacks, whip hoist.

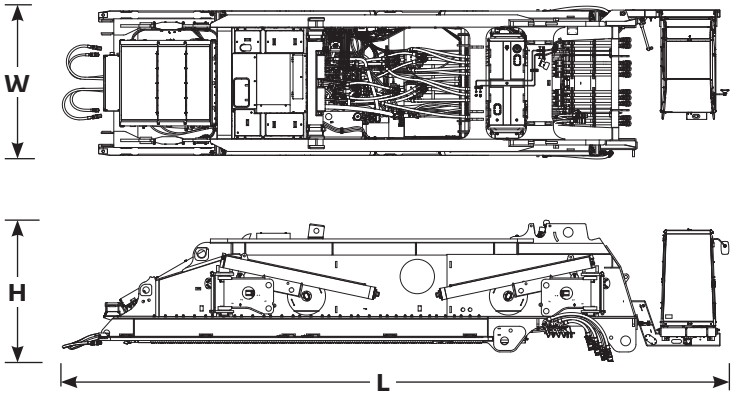

Rotating bed assembly	
Length	12,88 m
Width	3,00 m
Height	2,61 m
Weight	44 656 kg

Note: includes rotating bed jacks, whip hoist.
Note: excludes live mast, boom hoist, gantry.

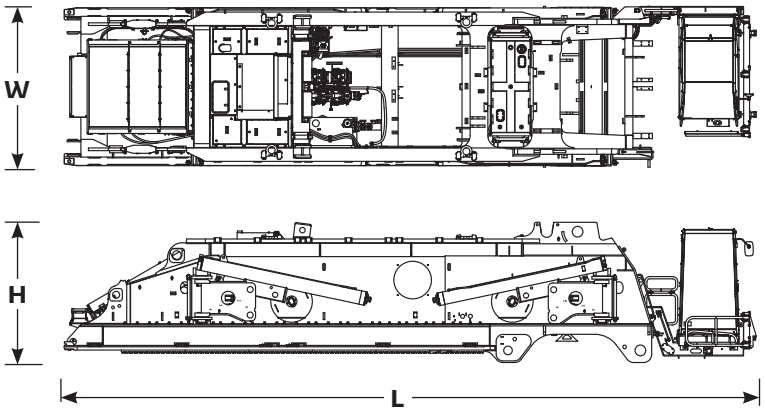

Rotating bed assembly	
Length	12,88 m
Width	3,00 m
Height	2,61 m
Weight	38 986 kg

Note: includes rotating bed jacks.
Note: excludes whip hoist, live mast, boom hoist, gantry.

Outline dimensions

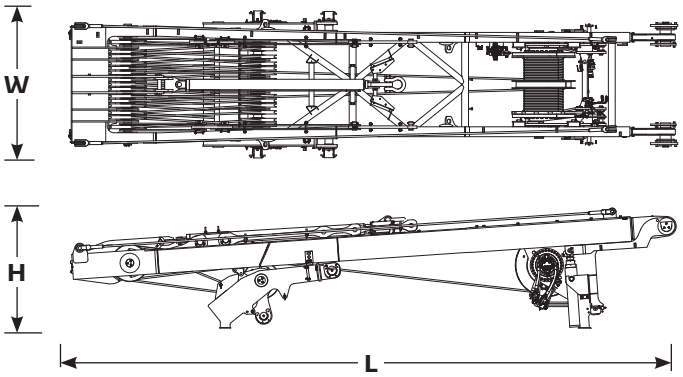

Live mast package	
Length	12,36 m
Width	3,00 m
Height	2,45 m
Weight	26 943 kg

Note: includes live mast, boom hoist, gantry.

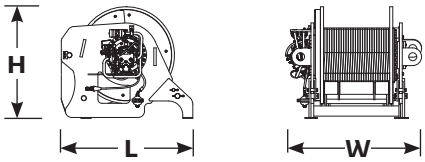

Whip hoist package	
Length	1,64 m
Width	1,64 m
Height	1,40 m
Weight	5 670 kg

Note: includes wire rope.

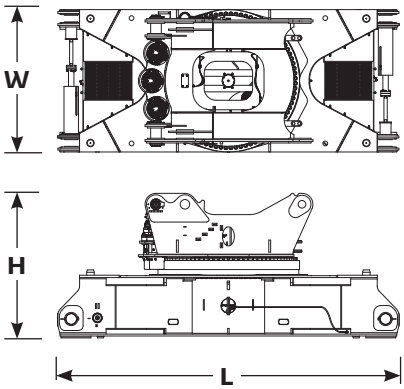

Carbody assembly without jacks	
Length	7,18 m
Width	3,00 m
Height	3,04 m
Weight	41 867 kg

Note: includes carbody, adapter frame, three swing drives, slewing ring.

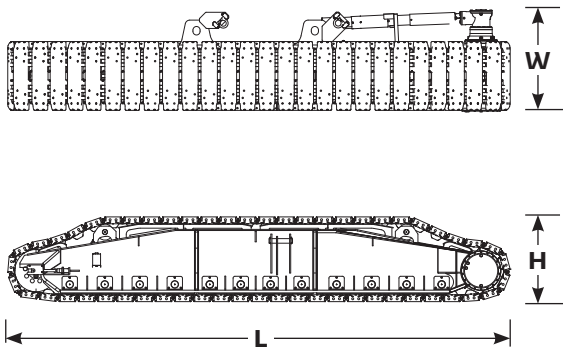

Crawler assembly 1,5 m pads	
Length	11.12 m
Width	2.3 m
Height	1.88 m
Weight	39 010 kg

Crawler assembly 2,0 m pads	
Weight	47 518 kg

Outline dimensions

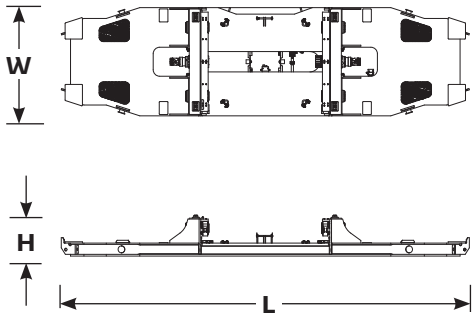

Counterweight tray assembly	
Length	9,42 m
Width	2,49 m
Height	0,94 m
Weight	19 960 kg

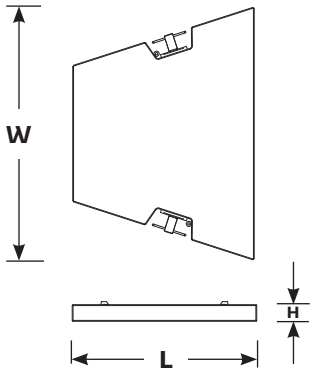

Counterweight box	
Length	2,39 m
Width	3,33 m
Height	0,35 m
Weight	10 000 kg

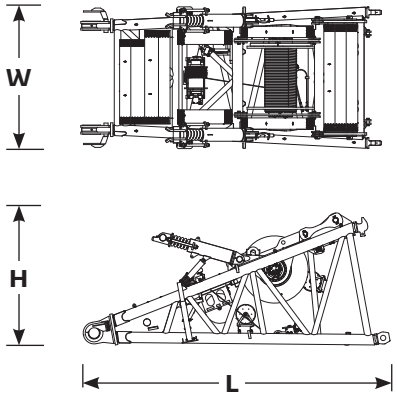

6 m No. 680 boom butt	
Length	6.5 m
Width	3,00 m
Height	2,79 m
Weight	19 572 kg

Note: main load hoist #1, wire rope, rigging winch.

6 m No. 680 boom butt with luffing hoist	
Weight	24 380 kg

Note: includes main load hoist #1, wire rope, rigging winch, luffing hoist.

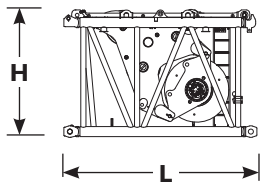

4 m No. 680 boom insert	
Length	4,27 m
Width	3,00 m
Height	2,79 m
Weight	17 900 kg

Note: main load hoist #2, wire rope.

Outline dimensions

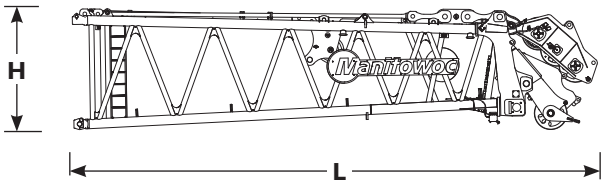

10 m No. 680 boom top	
Length	12,19 m
Width	3,00 m
Height	2,79 m
Weight	18 847 kg

Note: lower boom point, wire rope guides.

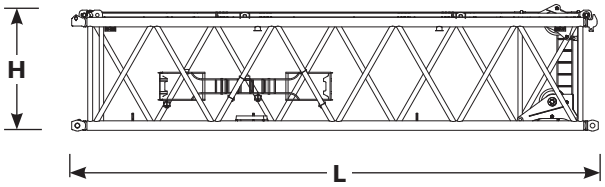

12 m No. 680 boom insert with sheaves	
Length	12,23 m
Width	3,00 m
Height	2,79 m
Weight	12 315 kg

Note: boom straps, backstay straps, luffing jib wire rope guide.

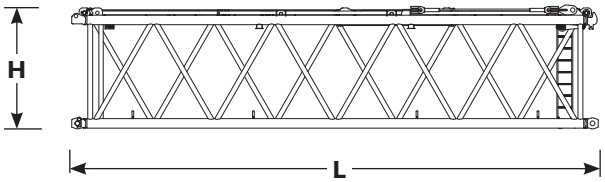

12 m No. 680 boom insert, heavy with equalizer	
Length	12,23 m
Width	3,00 m
Height	2,79 m
Weight	10 496 kg

Note: boom straps, backstay straps.

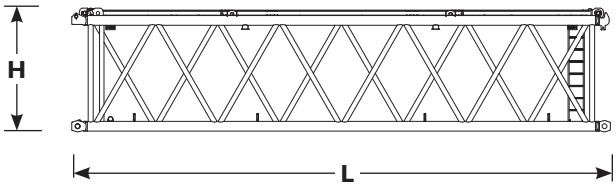

12 m No. 680 boom insert, heavy	
Length	12,23 m
Width	3,00 m
Height	2,79 m
Weight	9 734 kg

Note: boom straps, backstay straps.

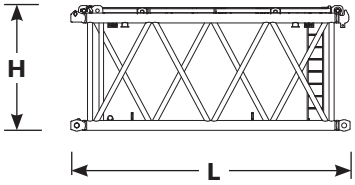

6 m No. 680 boom insert, heavy	
Length	6,27 m
Width	3,00 m
Height	2,79 m
Weight	5 679 kg

Note: boom straps, backstay straps.

Outline dimensions

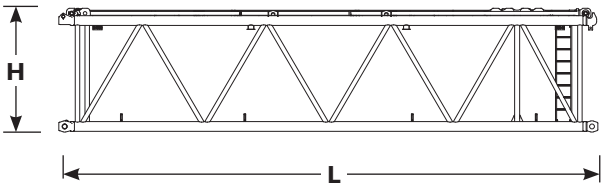

12 m No. 680 boom insert, medium with suspension	
Length	12,23 m
Width	3,00 m
Height	2,79 m
Weight	10 315 kg

Note: boom straps, backstay straps.

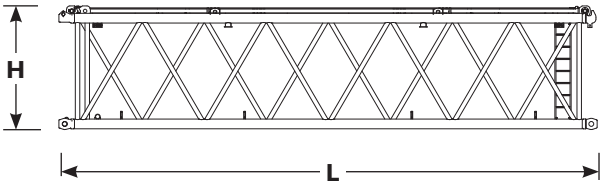

12 m No. 680 boom insert, medium	
Length	12,23 m
Width	3,00 m
Height	2,79 m
Weight	7 965 kg

Note: boom straps, backstay straps.

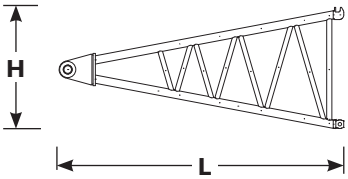

6 m No. 681 luffing jib butt	
Length	6,40 m
Width	3,00 m
Height	2,72 m
Weight	7 376 kg

Note: includes jib stops.

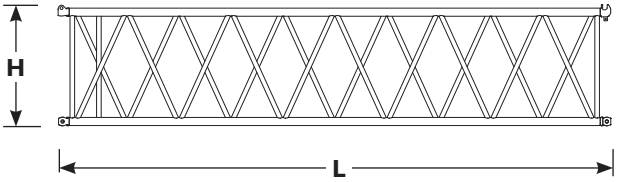

12 m No. 681 luffing jib insert	
Length	12,27 m
Width	3,00 m
Height	2,79 m
Weight	6 117 kg

Note: includes jib straps.

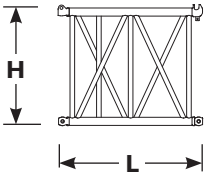

3 m No. 681 luffing jib insert	
Length	3,17 m
Width	3,00 m
Height	2,79 m
Weight	2 248 kg

Note: includes jib straps.

Outline dimensions

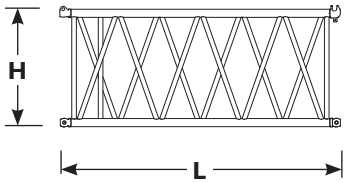

6 m No. 681 luffing jib insert	
Length	6,27 m
Width	3,00 m
Height	2,79 m
Weight	3 665 kg

Note: includes jib straps.

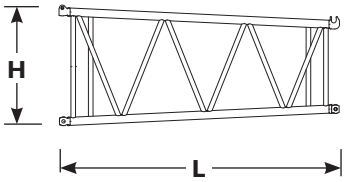

6 m No. 681-682 transition insert	
Length	6,27 m
Width	3,00 m
Height	2,79 m
Weight	3 583 kg

Note: includes jib straps.

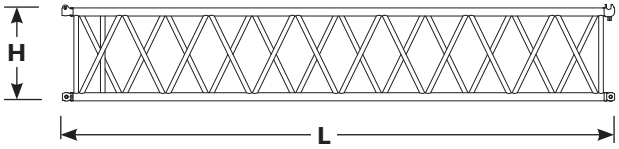

12 m No. 682 luffing jib insert	
Length	12,19 m
Width	2,49 m
Height (max)	2,29 m
Weight	5 967 kg

Note: includes jib straps.

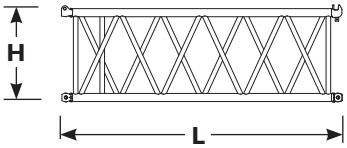

6 m No. 682 luffing jib insert	
Length	6,17 m
Width	2,49 m
Height	2,29 m
Weight	3 411 kg

Note: includes jib straps.

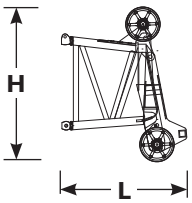

2 m No. 681-682 luffing jib top	
Length	3,33 m
Width	2,49 m
Height (max)	2,82 m
Weight	5 724 kg

Note: includes (8) sheave pack, wire rope guide.

Outline dimensions

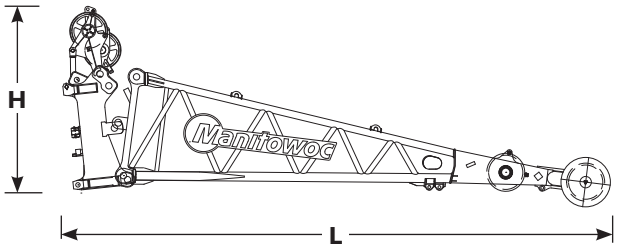

Wind cap + extended upper boom point	
Length	11,51 m
Width	2,697 m
Height (max)	2,82 m
Weight	9 316 kg

Note: includes 2 sheave lower boom point in wind cap.

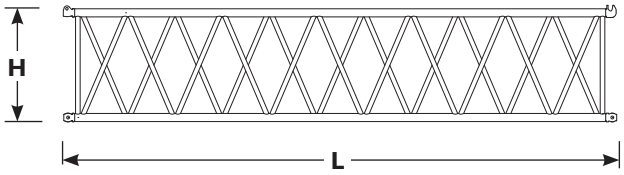

12 m No. 684 mast insert	
Length	12,19 m
Width	2,49 m
Height (max)	2,82 m
Weight	6 908 kg

Note: includes backhitch and counterweight straps.

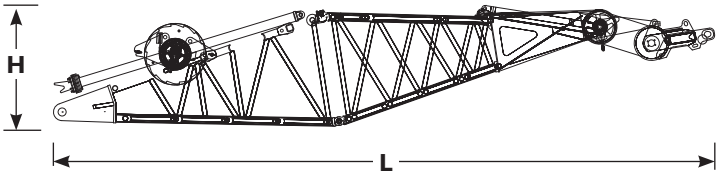

No. 684 mast top + butt transport package	
Length	14,58 m
Width	2,63 m
Height	2,82 m
Weight	25 720 kg

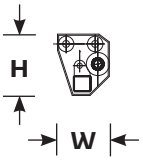

VPC-MAX actuator assembly	
Length	5,00 m
Width	1,16 m
Height	1,16 m
Weight	4 535 kg

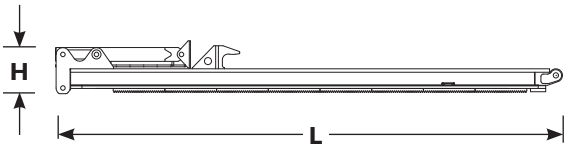

VPC-MAX beam assembly	
Length	11,18 m
Width	3,00 m
Height	1,17 m
Weight	21 320 kg

Transport data

Load summary

Item	Qty	Weight kg	1	2	3	4	5	6	7	8	9	10	11	12	13	14	15	16	17	18	19	20	21	22	23	24	25	26	27	28	29
	86 m boom Quantity on trailer load # (Does not include blocking, strapping, etc.)																														
Upperworks module	1	38 986	1																												
Whip hoist	1	5 670									1																				
Live mast package	1	26 943		1																											
Carbody + adapter	1	41 867			1																										
Crawler assembly (1,5 m pads)	2	39 010				1	1																								
Counterweight tray	1	19 960						1																							
Counterweight box	28	10 000																2	2	2	2	2	2	2	2	2	2	2	2	2	2
Boom butt with drum 1	1	19 572							1																						
4 m No. 680 boom insert with drum 2	1	17 900								1																					
12 m No. 680 heavy boom insert	1	12 315									1																				
12 m No. 680 heavy boom insert	1	9 734										1																			
12 m No. 680 heavy boom insert with equalizer rails	1	10 496											1																		
6 m heavy boom insert	1	5 679												1																	
12 m medium insert with suspension	1	10 315													1																
12 m medium insert	1	7 965														1															
10 m boom top	1	18 847															1														
317 t block	1	7 893												1																	
22,2 mt weight ball	1	1 270										1																			
Approximate total shipping weight kg			38 986	26 943	41 867	39 010	39 010	19 960	19 572	17 900	17 985	11 004	10 496	13 572	10 315	7 965	18 847	20 000	20 000	20 000	20 000	20 000	20 000	20 000	20 000	20 000	20 000	20 000	20 000	20 000	20 000

Assembly

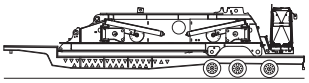

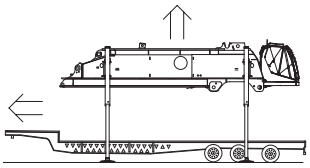

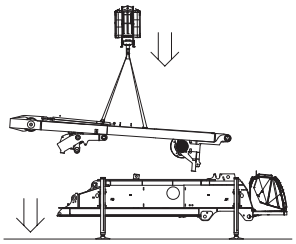

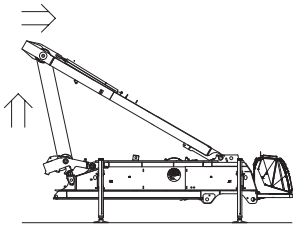

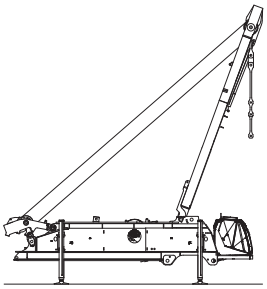

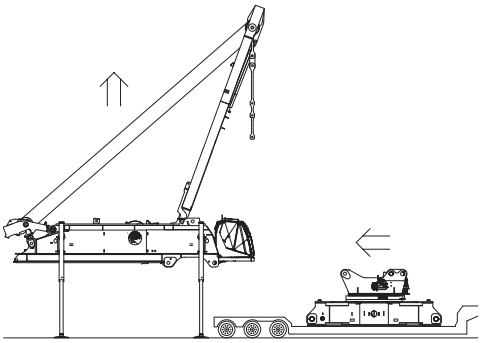

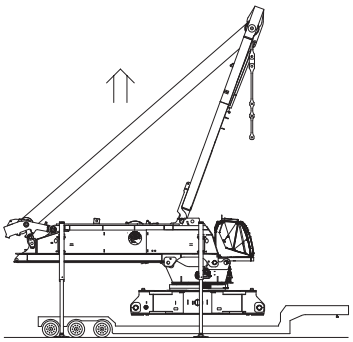

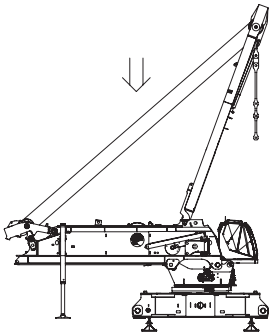

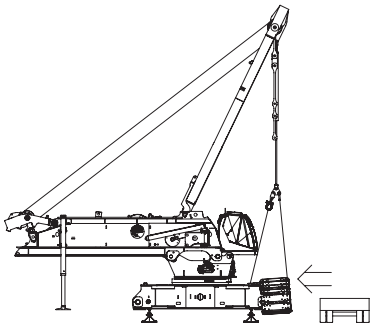

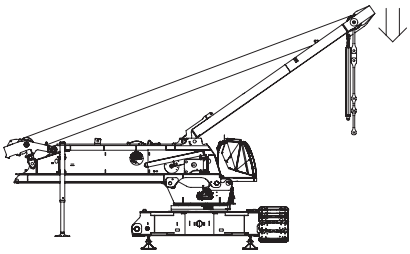

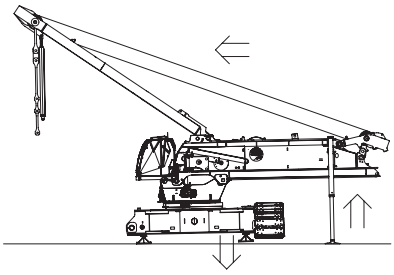

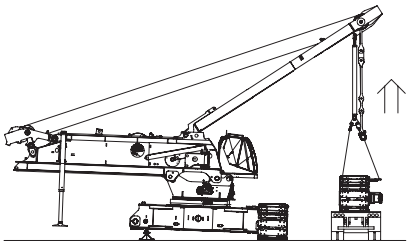

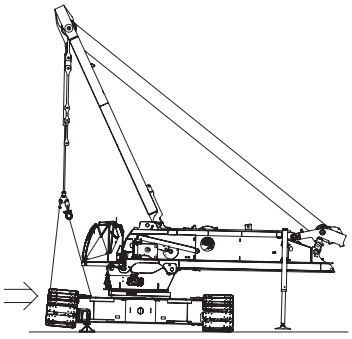

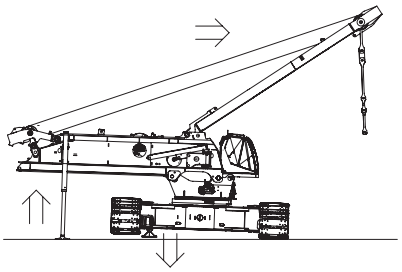

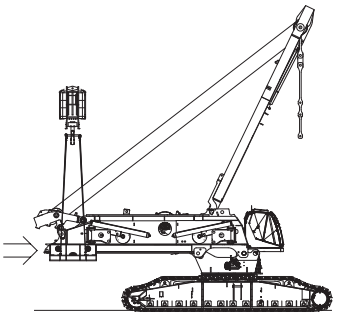

Assembly

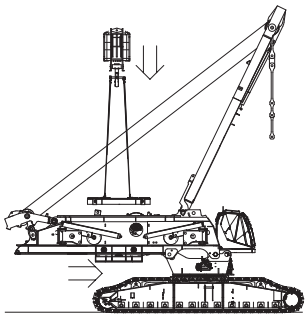

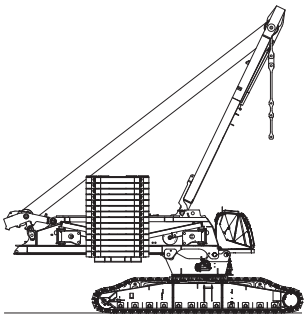

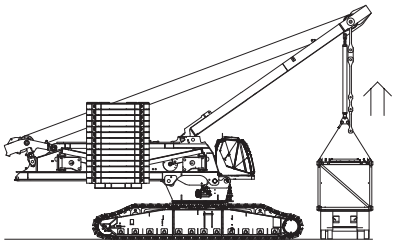

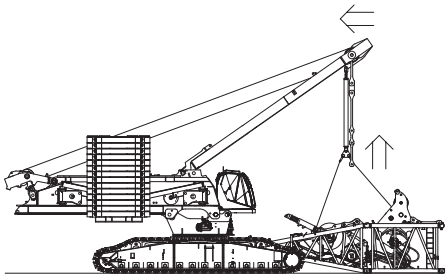

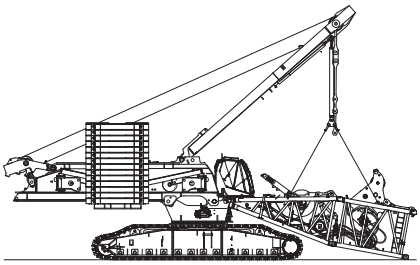

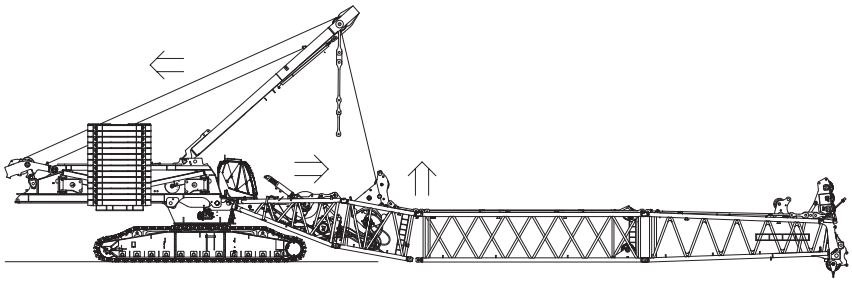

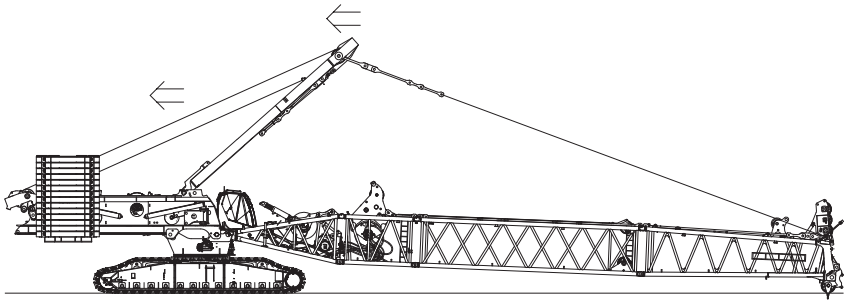

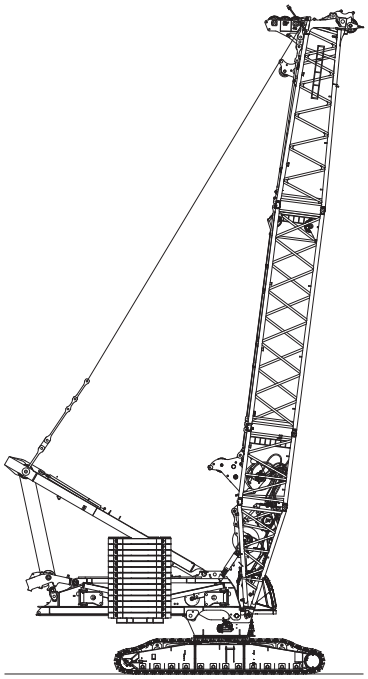

Performance data

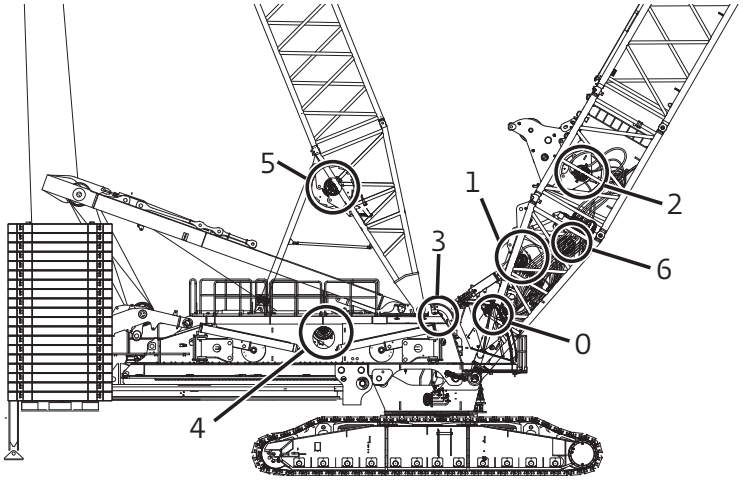

Drum identification	
Drum number	Function
1	Main hoist - standard
2	Auxiliary main hoist - optional
3	Whip hoist - standard
4	Boom hoist (VPC) - standard Mast hoist (VPC-MAX) - standard
5	Boom hoist (VPC-MAX) - optional
6	Luffing hoist - optional
0	Rigging winch - optional

Working weight	
	kg
32 m No. 680 main boom,	564 133
upper boom point,	
600 t hook block	
300 t counterweight	

Performance data

No. 680 boom
Hoist reeving for main load block
single lead line - 32 mm wire rope

No. Parts of Line	Maximum Load kg
2	44 270
4	88 540
6	132 810
8	177 080
10	221 350
12	265 620
14	309 890
16	350 900
18	390 930
20	430 160
22	468 610
24	506 300
26	543 230
28	579 430
30	614 910
32	649 680

No. 680 boom
Hoist reeving for main load block
two lead lines - 32 mm wire rope

No. Parts of Line	Maximum Load kg
8	177 080
12	265 620
16	354 160
20	442 710
24	531 250
28	619 790
32	700 000

No. 680 boom
Hoist reeving for whip load block
single lead line - 28 mm wire rope

No. Parts of Line	Maximum Load kg
1	13 610
2	27 220

No. 680-681 boom with 7,6 m extended upper boom point
Hoist reeving for main load block
single lead line - 32 mm wire rope

No. Parts of Line	Maximum Load kg
2	44 270
4	88 540
6	132 810

Maximum spooling capacities

Drum 1 (hoist line) 32 mm wire rope*	1100 m 10 layers
Drum 2 (hoist line) 32 mm wire rope*	1100 m 10 layers
Drum 3 (whip line) 28 mm wire rope*	579 m 8 layers

**6,4 m is deducted from maximum spooling capacities for 3 dead wraps per drum*

Performance for main hoist (drum #1) and auxiliary main hoist (drum #2)
32 mm wire rope
Single line speed in m per minute

Single line pull kg	Single line pull/single line speed m/min Layer 1	2	3	4	5	6	7	8	9	10
0	94	102	111	120	128	137	145	154	163	171
4 536	89	97	105	113	120	128	135	142	150	157
9 072	85	92	99	105	112	118	125	131	134	136
13 067	81	87	90	91	93	95	96	98	100	101
18 144	69	71	73	74	76	78	79	81	84	88
22 135	60	62	63	65	67	70	74	77	77	77

Performance for whip (drum #3)
28 mm wire rope
Single line speed in m per minute

Single line pull kg	Single line pull/single line speed m/min Layer 1	2	3	4	5	6	7	8
0	90	98	106	113	121	128	136	143
2 268	86	93	100	107	114	120	127	133
4 536	82	89	95	101	106	112	118	123
6 804	78	84	89	90	92	93	94	96
9 072	69	70	72	73	74	76	77	79
11 340	58	60	61	63	64	66	70	73
13 607	52	53	54	58	62	65	69	72

Boom combinations

No. 680 main boom combinations					
Boom length m	Main boom inserts m				
	4,0 XH	6,0 H	12,0 XH	12,0 H	12,0 M
32	1	0	1	0	0
38	1	1	1	0	0
44	1	0	1	1	0
50	1	1	1	1	0
56	1	0	1	2	0
62	1	1	1	2	0
68	1	0	1	2	1
74	1	1	1	2	1
80	1	0	1	2	2
86	1	1	1	2	2
92	1	0	1	2	3
98	1	1	1	2	3
104	1	0	1	2	4

XH: Extra heavy insert
H: Heavy insert
M: Medium insert

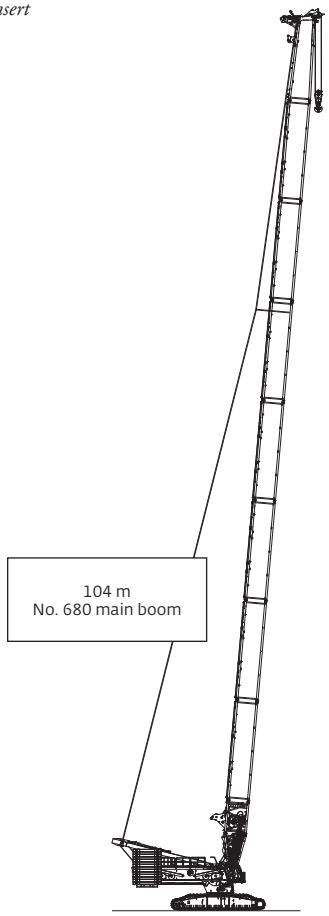

Boom combinations

No. 680-681 WA boom with 7,6 m extended upper boom point								
Boom length m	Main boom inserts m							
	4,0 XH	12,0 XH	12,0 H	12,0 M	3,0*	6,0*	6,0**	12,0*
89	1	1	2	2	0	0	1	1
92	1	1	2	2	1	0	1	1
95	1	1	2	2	0	1	1	1
98	1	1	2	2	1	1	1	1
101	1	1	2	3	0	0	1	1
104	1	1	2	3	1	0	1	1
107	1	1	2	3	0	1	1	1

XH: Extra heavy insert
H: Heavy insert
M: Medium insert
** luffing jib insert*
*** luffing jib transition insert*

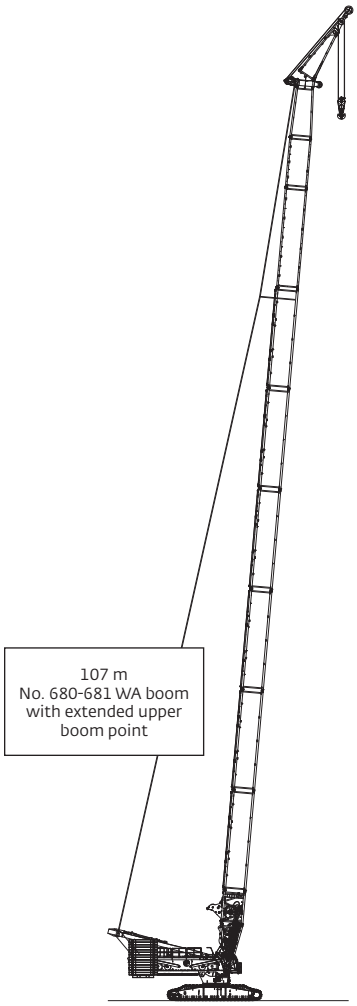

Boom combinations

No. 681-682 luffing jib combinations					
Luffing jib length m	Luffing jib inserts m				
	3,0	6,0	6,0*	12,0	12,0*
26	0	0	0	1	0
29	1	0	0	1	0
35	1	1	0	1	0
41	1	1	1	1	0
47	1	1	0	1	1
53	1	1	1	1	1
59	1	1	0	1	2
65	1	1	1	1	2
71	1	1	0	1	3
77	1	1	1	1	3
83	1	1	0	1	4
89	1	1	1	1	4
95	1	1	0	1	5
101	1	1	1	1	5

** Shallow depth inserts*

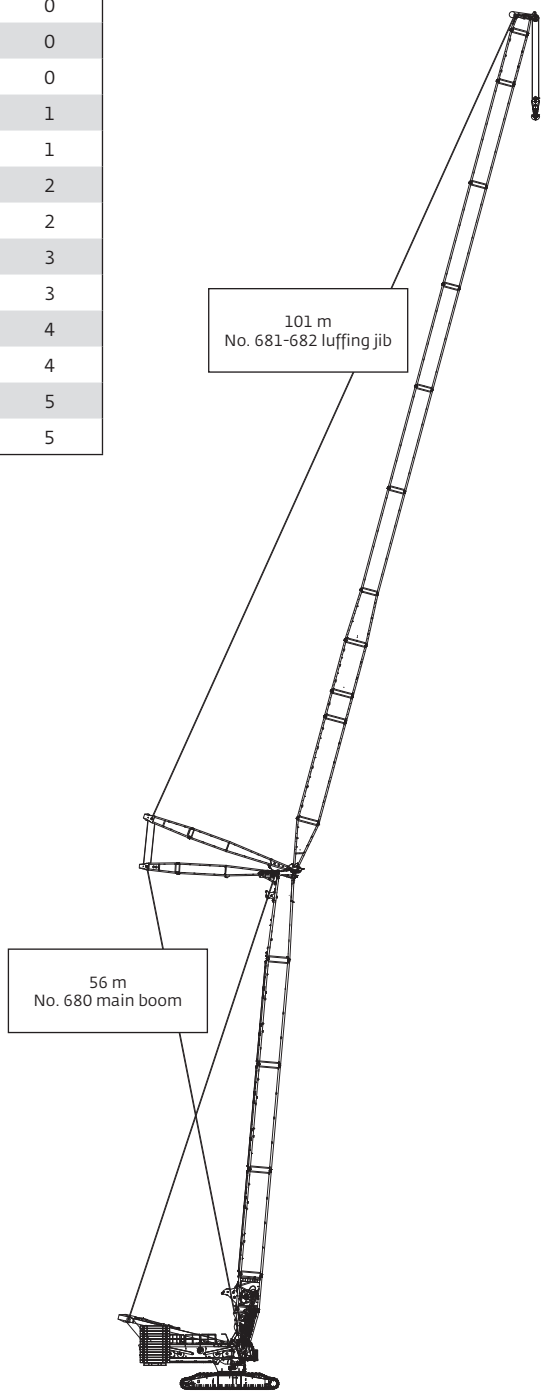

Main boom range diagram

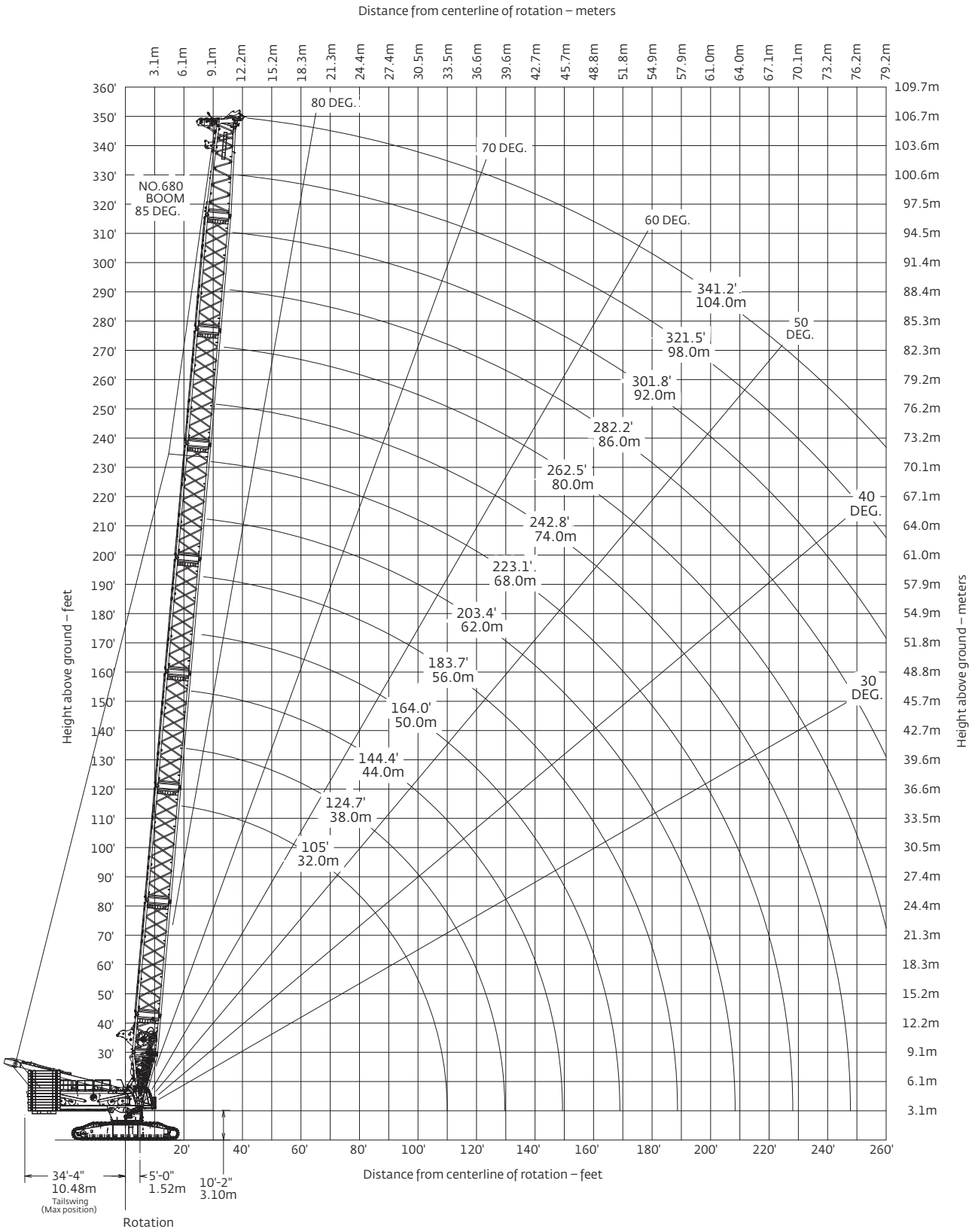

Main boom load charts

No. 680 boom

300 t counterweight

360° Rating — kg x 1000

	Boom length m												
	32	**38**	**44**	**50**	**56**	**62**	**68**	**74**	**80**	**86**	**92**	**98**	**104**
Radius m													
5,8	650,0												
6	590,3												
6,5	515,8												
7	503,9	496,2	486,7										
7,5	476,2	469,1	460,8	452,1									
8	451,5	445,1	437,9	429,9	420,9								
8,5	429,0	423,5	417,1	410,0	402,0								
9	408,7	403,8	398,1	391,8	384,6	376,6							
10	373,2	369,3	364,8	359,7	353,9	347,3	339,4	331,6					
11	343,4	340,2	336,5	332,4	327,6	322,3	315,8	309,1	302,3	265,9	219,4		
12	317,8	315,2	312,2	308,8	304,9	300,4	295,0	289,5	283,7	262,4	216,3	192,6	
14	271,4	273,3	271,6	269,8	267,4	264,2	260,3	256,4	252,1	249,1	210,3	188,1	158,4
16	223,6	226,4	229,1	232,2	234,2	233,5	232,1	229,8	226,6	223,6	204,6	183,5	154,6
18	190,6	192,9	194,8	196,9	198,6	201,0	202,5	203,8	203,6	203,2	198,6	179,1	150,9
20	166,0	168,1	169,7	171,6	173,0	174,8	175,8	177,4	178,2	179,9	180,8	174,6	147,3
22	146,8	148,7	150,2	151,8	153,1	154,7	155,6	157,1	157,7	159,2	159,8	162,6	143,7
24	131,4	133,2	134,6	136,1	137,2	138,7	139,5	140,8	141,4	142,7	143,3	144,7	140,3
26	118,9	120,6	121,8	123,2	124,3	125,6	126,3	127,5	128,1	129,3	129,8	131,1	131,6
28	108,5	110,0	111,2	112,5	113,5	114,7	115,4	116,5	117,0	118,1	118,5	119,6	119,7
30	99,7	101,1	102,2	103,4	104,4	105,5	106,1	107,1	107,6	108,6	109,0	108,4	107,8
32	92,1	93,4	94,5	95,7	96,5	97,5	98,2	99,1	99,5	99,6	99,4	97,9	97,4
34		86,9	87,9	88,9	89,7	90,7	91,3	91,9	92,3	90,7	90,5	88,9	88,4
36		81,1	82,1	83,0	83,8	84,7	85,3	84,3	84,3	82,9	82,7	81,0	80,5
38		75,9	76,9	77,8	78,6	78,9	78,9	77,4	77,4	75,9	75,8	74,1	73,6
40			72,3	73,2	73,9	72,9	72,8	71,2	71,3	69,8	69,6	67,9	67,5
42			68,2	68,9	68,7	67,4	67,3	65,8	65,8	64,3	64,1	62,4	61,9
44			64,5	64,2	63,7	62,5	62,4	60,8	60,9	59,4	59,1	57,5	57,0
46				59,7	59,3	58,0	57,9	56,3	56,4	54,9	54,6	53,0	52,5
48				55,5	55,1	53,9	53,8	52,3	52,3	50,8	50,6	48,9	48,4
50					51,4	50,1	50,1	48,5	48,6	47,1	46,8	45,1	44,7
54					44,7	43,5	43,5	42,0	42,0	40,5	40,3	38,6	38,1
58						37,8	37,8	36,3	36,4	34,9	34,7	33,0	32,5
62							32,9	31,5	31,6	30,1	29,8	28,1	27,7
66							28,6	27,2	27,3	25,8	25,6	23,9	23,4
70								23,4	23,6	22,1	21,9	20,2	19,7
74									20,2	18,7	18,6	16,9	16,4
78										15,8	15,6	13,9	13,5
82										13,0	12,9	11,2	10,8
86											8,5	8,8	8,4

For complete chart, refer to www.cranelibrary.com.

Extended UBP range diagram

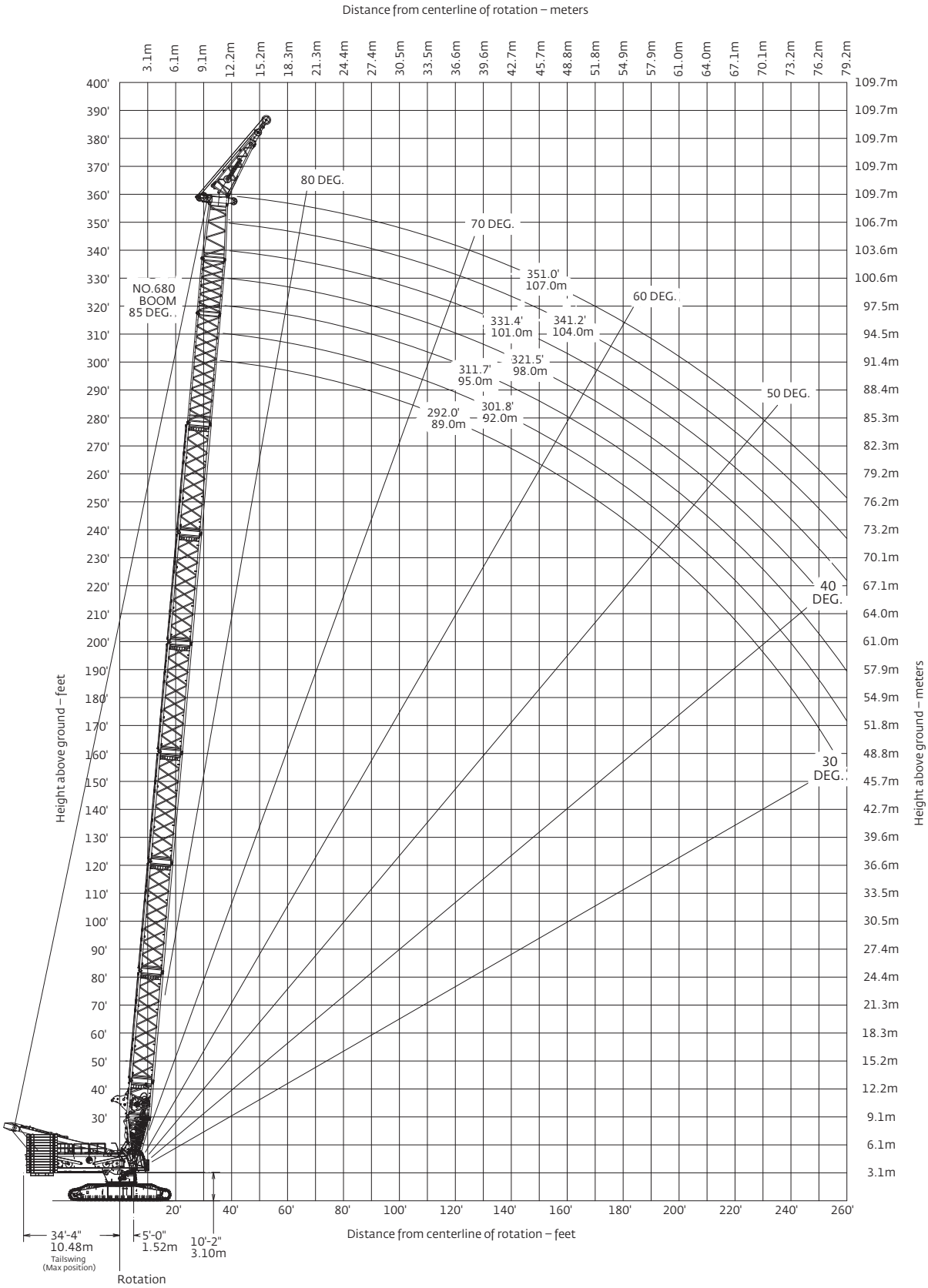

Extended UBP load charts

No. 680-681 WA boom with 7,6 m extended UBP

300 t counterweight
360° Rating — kg x 1000
28° Offset

	Boom length m						
	89	**92**	**95**	**98**	**101**	**104**	**107**
Radius m							
13,7	132,8						
14	132,8						
16	132,8	132,8	132,8	132,8	132,8	131,5	122,8
18	132,8	132,8	132,8	132,8	132,8	128,8	120,2
20	132,8	132,8	132,8	132,6	132,8	126,2	117,7
22	132,8	132,8	132,8	130,3	131,7	123,2	115
24	132,8	132,8	132,8	126,3	128,1	119,1	111,2
26	132,2	132,3	132,1	122,9	124,4	115,4	107,6
28	120,6	121,3	121,7	119,3	120,5	111,9	104,1
30	111	111,7	111,9	112,9	113,0	108,7	100,8
32	102,8	103,4	103,7	104,1	104,3	103,6	97,8
34	95,8	96,1	96,1	95,2	95,1	94,4	94,2
36	89,1	88,2	87,9	87,1	87,1	86,3	86,1
38	82,0	81,1	80,8	80,0	80,0	79,2	78,9
40	75,7	74,8	74,5	73,8	73,7	72,9	72,6
42	70,1	69,2	68,9	68,1	68,1	67,2	67,0
44	65,1	64,1	63,8	63,0	63,0	62,2	61,9
46	60,5	59,5	59,3	58,4	58,4	57,6	57,3
48	56,3	55,3	55,1	54,3	54,2	53,4	53,1
50	52,5	51,5	51,2	50,5	50,4	49,6	49,3
54	45,9	44,8	44,5	43,7	43,7	42,8	42,5
58	40,1	39,1	38,8	38,0	37,9	37,1	36,8
62	35,2	34,1	33,9	33,0	33,0	32,2	31,8
66	30,9	29,8	29,5	28,7	28,7	27,8	27,5
70	27,1	26,0	25,7	24,9	24,9	24,0	23,7
74	23,7	22,6	22,4	21,5	21,5	20,6	20,3
78	20,7	19,6	19,3	18,5	18,4	17,6	17,3
82	17,9	16,8	16,6	15,7	15,7	14,9	14,6
86	15,4	14,3	14,1	13,3	13,3	12,4	12,1
90	11,2	12,0	11,8	11,0	11,0	10,2	9,8
94		9,9	9,7	8,9	8,9	8,1	7,8

No. 680-681 WA boom with 7,6 m extended UBP

300 t counterweight
360° Rating — kg x 1000
35° Offset

	Boom length m					
	292	**302**	**312**	**322**	**331**	**341**
Radius m						
15,2	132,8	132,8	132,8			
16	132,8	132,8	132,8			
18	132,8	132,8	130,8	131,8	124,5	116,3
20	132,8	132,8	127,2	128,3	120,5	113,6
22	132,8	132,8	123,7	124,6	116,7	109,7
24	132,8	132,8	120,4	121,2	113,2	106,2
26	132,2	132,3	117,3	118,0	109,9	102,8
28	120,7	121,4	114,4	115,0	106,8	99,7
30	111,1	111,7	111,3	111,6	103,9	96,7
32	102,9	103,5	104,2	104,4	101,1	94,0
34	95,8	96,3	96,0	95,9	95,5	91,4
36	89,4	88,9	87,8	87,8	87,0	87,1
38	82,6	81,6	80,7	80,6	79,8	79,6
40	76,2	75,3	74,3	74,3	73,5	73,2
42	70,6	69,6	68,6	68,6	67,8	67,5
44	65,5	64,6	63,5	63,5	62,7	62,4
46	60,9	59,9	58,9	58,9	58,1	57,8
48	56,7	55,7	54,7	54,7	53,8	53,6
50	52,9	51,9	50,8	50,8	50,0	49,7
54	46,1	45,1	44,1	44,0	43,2	42,9
58	40,4	39,4	38,3	38,3	37,4	37,2
62	35,4	34,4	33,3	33,3	32,4	32,1
66	31,1	30,0	29,0	28,9	28,1	27,8
70	27,2	26,2	25,1	25,1	24,2	23,9
74	23,8	22,8	21,7	21,7	20,8	20,5
78	20,8	19,7	18,6	18,6	17,8	17,5
82	18,0	16,9	15,9	15,8	15,0	14,7
86	15,4	14,4	13,4	13,3	12,5	12,2
90	11,3	12,1	11,1	11,1	10,2	10,0
94		9,9	8,9	8,9	8,1	7,9

Luffing jib range diagram

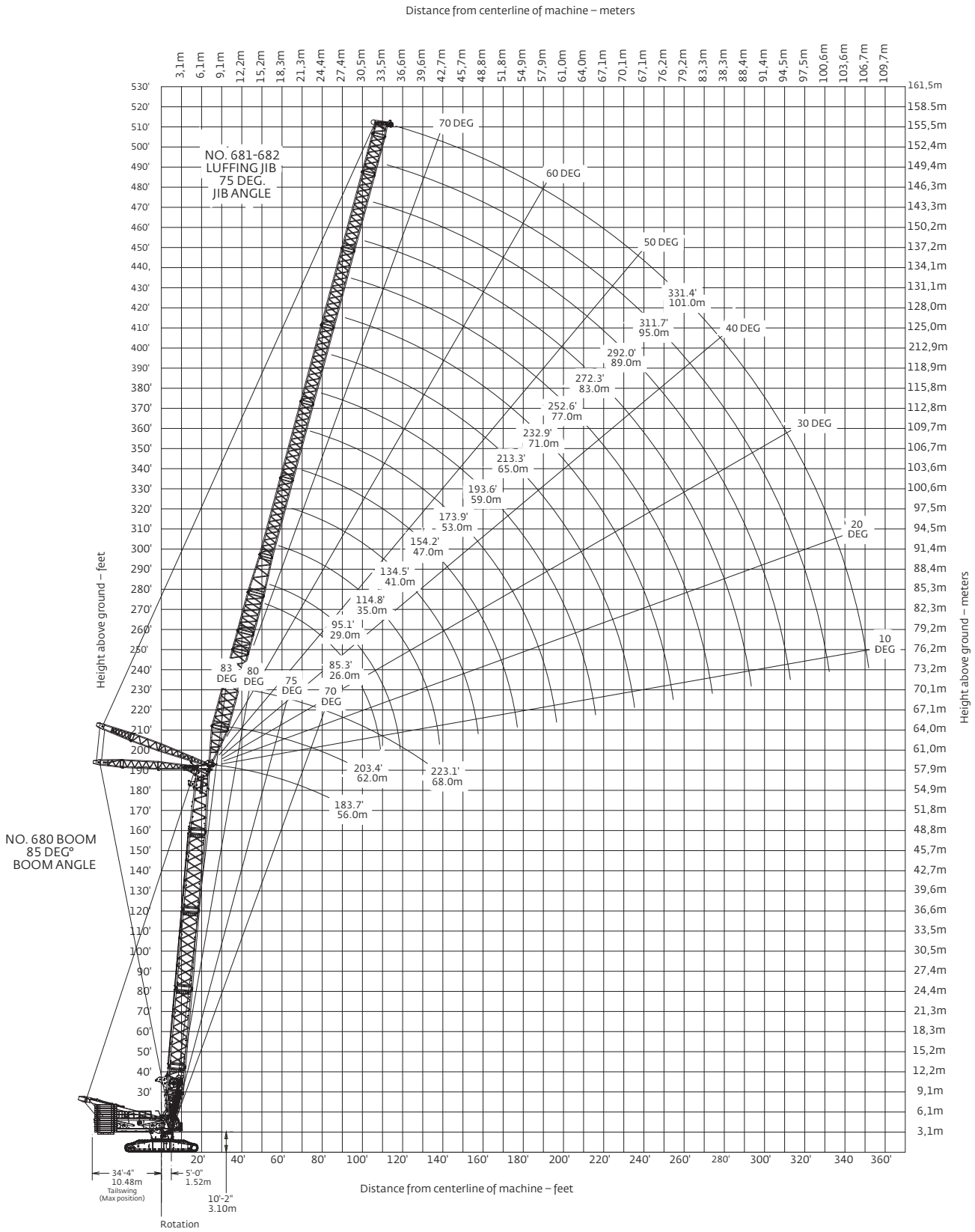

Luffing jib load charts

No. 681-682 luffing jib on No. 680 boom

300 t counterweight

360° Rating

kg x 1000

85° boom angle

35 m luffing jib length					
	Boom length m				
	44	50	56	62	68
Radius m					
18	214,6				
20	191,2	194,1	191,5	189,0	178,6
22	169,4	171,8	172,6	173,6	170,8
24	152,3	154,4	154,7	156,2	157,4
26	138,2	140,1	140,4	141,7	142,3
28	126,4	128,3	128,5	129,6	130,2
30	116,5	118,2	118,4	119,5	120,0
32	108,1	109,6	109,8	110,8	111,3
34	100,7	102,1	102,3	103,3	103,7
36	94,3	95,6	95,8	96,7	97,1
38	88,6	89,9	90,0	90,9	91,2
40	83,5	84,7	84,9	85,7	86,1
42				81,0	81,1

47 m luffing jib length					
	Boom length m				
	44	50	56	62	68
Radius m					
22	171,5	173,9	172,8		
24	153,8	155,9	156,5	156,4	134
26	139,6	141,5	141,8	143,0	132,7
28	127,7	129,5	129,8	130,9	130,1
30	117,7	119,4	119,6	120,6	121,5
32	109,1	110,7	110,9	111,9	112,3
34	101,7	103,1	103,4	104,2	104,7
36	95,2	96,5	96,7	97,6	97,9
38	89,5	90,8	90,9	91,7	91,4
40	84,4	85,6	85,7	86,0	85,4
42	79,8	81,0	81,0	80,5	79,9
44	75,8	76,8	76,1	75,6	75,1
46	72,0	72,4	71,6	71,1	70,7
48	68,4	68,3	67,5	67,0	66,6
50	64,5	64,5	63,8	63,3	62,9
52	60,9	60,9	60,2	59,8	59,4
54				56,5	56,2

For complete chart, refer to www.cranelibrary.com.

Luffing jib load charts

No. 681-682 luffing jib on No. 680 boom

300 t counterweight

360° Rating

kg x 1000

85° boom angle

59 m luffing jib length				
	Boom length m			
	44	50	56	62
Radius m				
26	140,9	143	134,4	121,5
28	129,0	130,7	132,1	120,3
30	118,8	120,5	120,7	119,7
32	110,2	111,7	111,9	112,9
34	102,7	104,1	104,3	104,6
36	96,1	97,5	97,5	96,9
38	90,3	91,6	90,7	90,1
40	85,2	85,7	84,6	84,0
42	80,3	80,2	79,2	78,6
44	75,3	75,2	74,3	73,7
46	70,8	70,7	69,8	69,3
48	66,7	66,7	65,8	65,3
50	63,0	62,9	62,1	61,6
52	59,5	59,5	58,7	58,3
54	56,4	56,3	55,6	55,2
56	53,4	53,4	52,7	52,3
58	50,7	50,6	50,0	49,6
60	48,1	48,1	47,5	47,1
62	45,7	45,7	45,1	44,7
64	43,4	43,4	42,8	42,5

For complete chart, refer to www.cranelibrary.com.

Luffing jib load charts

No. 681-682 luffing jib on No. 680 boom

300 t counterweight

360° Rating

kg x 1000

85° boom angle

77 m luffing jib length				
	Boom length m			
	44	50	56	62
Radius m				
30	97,7	91,6	85,3	
32	97,4	91,3	85,0	78,3
34	97,0	91,0	84,7	77,8
36	94,9	90,6	84,4	77,5
38	88,4	88,1	84,1	77,2
40	82,2	82,0	81,2	76,8
42	76,7	76,6	75,5	75,1
44	71,7	71,6	70,6	70,1
46	67,3	67,1	66,2	65,6
48	63,2	63,1	62,2	61,6
50	59,5	59,3	58,5	58,0
52	56,0	55,9	55,1	54,6
54	52,9	52,8	52,0	51,5
56	50,0	49,9	49,2	48,7
58	47,3	47,2	46,5	46,1
60	44,8	44,7	44,0	43,6
62	42,5	42,4	41,7	41,3
64	40,3	40,2	39,6	39,1
66	38,3	38,2	37,6	37,1
68	36,3	36,3	35,7	35,3
70	34,5	34,5	33,9	33,5
72	32,8	32,7	32,2	31,8
74	31,2	31,1	30,6	30,2
76	29,6	29,6	29,0	28,7
78	28,1	28,1	27,6	27,3
80	26,7	26,7	26,2	25,9
82	25,3	25,3	24,9	24,6

For complete chart, refer to www.cranelibrary.com.

Outline dimensions
VPC-MAX

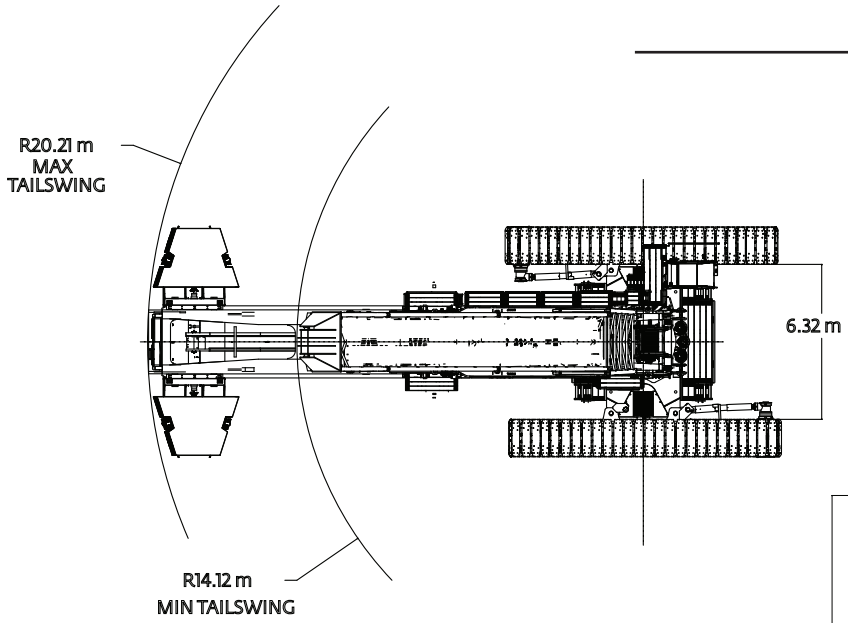

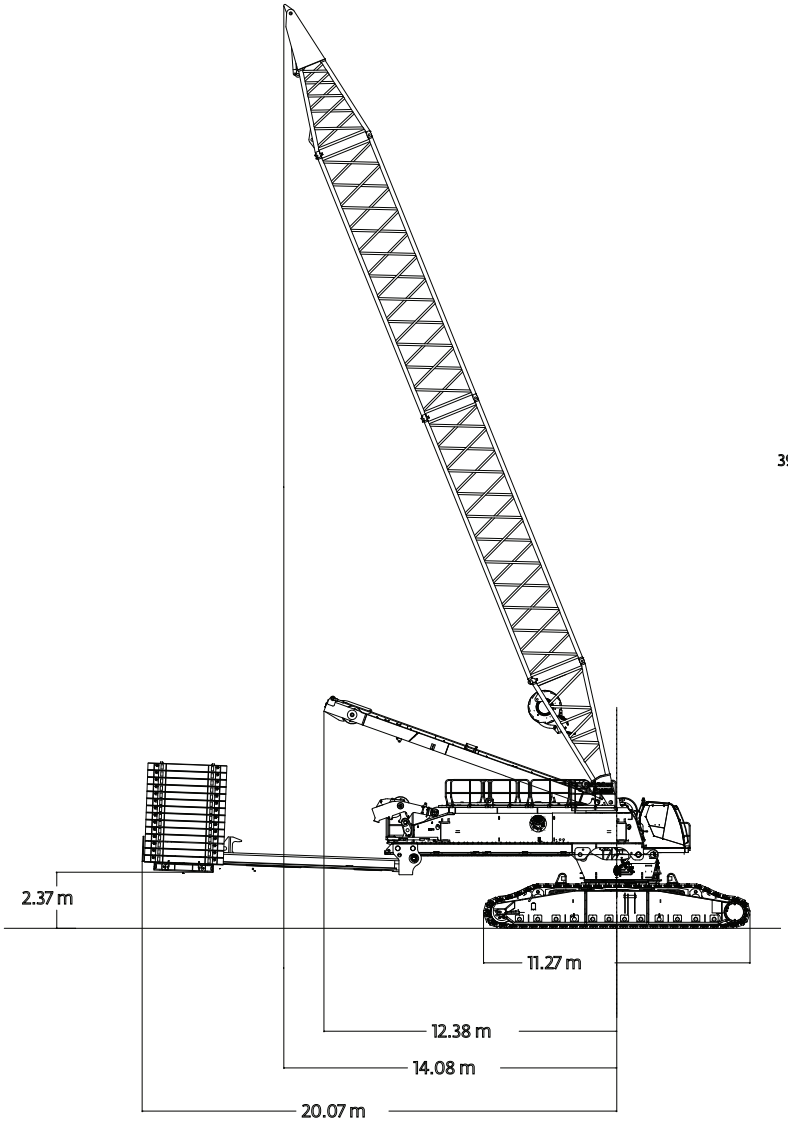

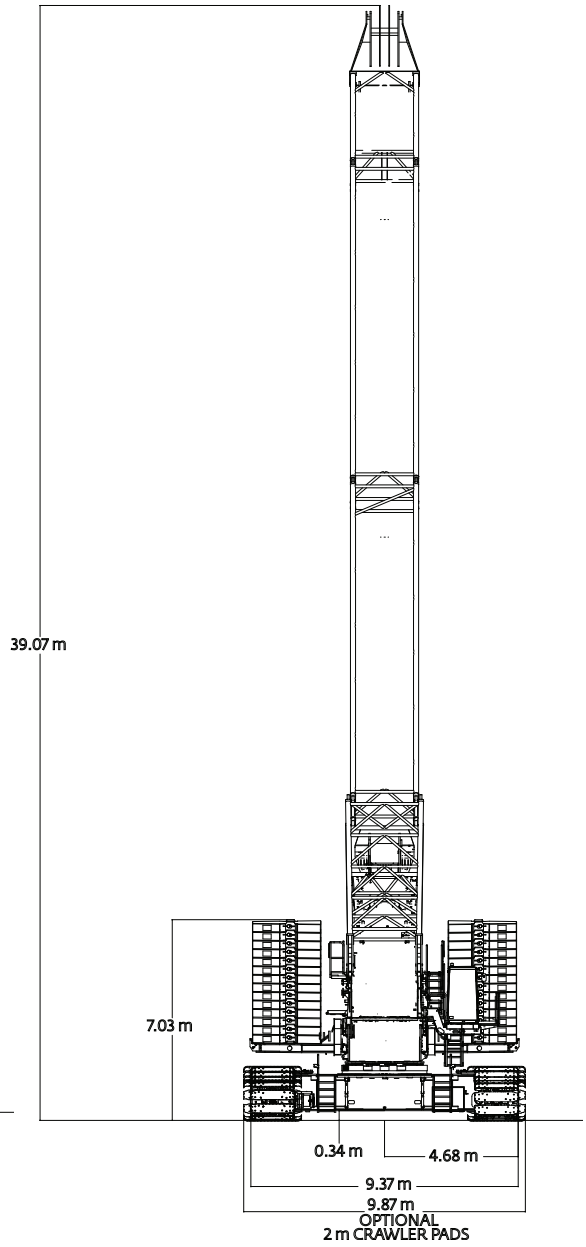

Transport data
VPC-MAX

Load summary

Item	Qty	Weight kgs	86 m boom Quantity on trailer load # (Does not include blocking, strapping, etc.)																			
			1	2	3	4	5	6	7	8	9	10	11	12	13	14	15	16	17	18	19	20
Upperworks module (with jacks)	1	38986	1																			
Whip hoist	1	5670									1											
Live mast package	1	26943		1																		
Carbody + adapter	1	41867			1																	
Crawler assembly (1,5 m pads)	2	39009				1	1															
Counterweight tray	1	19958						1														
Counterweight box	28	10000																2	2	2	2	2
Boom butt with drum 1	1	19573							1													
4 m No. 680 boom insert with drum 2	1	17899								1												
12 m No. 680 heavy boom insert	1	12315									1											
12 m No. 680 heavy boom insert	1	9734										1										
12 m No. 680 heavy boom insert with equalizer rails	1	10496											1									
6 m heavy boom insert	1	5679												1								
12 m medium insert with suspension	1	10315													1							
12 m medium insert	1	7965														1						
10 m boom top	1	18847															1					
317 t block	1	7893												1								
22,2 mt weight ball	1	1270										1										
VPC-MAX beam	1	21319																				
VPC-MAX actuator	1	4536												1								
Fixed mast 6 m butt + 6 m top	1	25719																				
12 m mast insert	2	6908																				
VPC-MAX counterweight box	10	10000																				
Approximate total shipping weight kgs			38986	26943	41867	39009	39009	19958	19573	17899	17985	11004	10496	18107	10315	7965	18847	20000	20000	20000	20000	20000

(continued)

Load summary

Item	Qty	Weight kgs	21	22	23	24	25	26	27	28	29	30	31	32	33	34	35	36	37
			86 m boom Quantity on trailer load # (Does not include blocking, strapping, etc.)																
Upperworks module (with jacks)	1	38986																	
Whip hoist	1	5670																	
Live mast package	1	26943																	
Carbody + adapter	1	41867																	
Crawler assembly (1,5 m pads)	2	39009																	
Counterweight tray	1	19958																	
Counterweight box	28	10000	2	2	2	2	2	2	2	2	2								
Boom butt with drum 1	1	19573																	
4 m No. 680 boom insert with drum 2	1	17899																	
12 m No. 680 heavy boom insert	1	12315																	
12 m No. 680 heavy boom insert	1	9734																	
12 m No. 680 heavy boom insert with equalizer rails	1	10496																	
6 m heavy boom insert	1	5679																	
12 m medium insert with suspension	1	10315																	
12 m medium insert	1	7965																	
10 m boom top	1	18847																	
317 t block	1	7893																	
22,2 mt weight ball	1	1270																	
VPC-MAX beam	1	21319										1							
VPC-MAX actuator	1	4536																	
Fixed mast 6 m butt + 6 m top	1	25719											1						
12 m mast insert	2	6908												1	1				
VPC-MAX counterweight box	10	10000												1	1	2	2	2	2
Approximate total shipping weight kgs			20000	20000	20000	20000	20000	20000	20000	20000	20000	21319	25719	16908	16908	20000	20000	20000	20000

Boom combinations
VPC-MAX

No. 680 VPC-MAX main boom combinations

Boom length m	Main boom inserts m				
	4,0 XH	6,0 H	12,0 XH	12,0 H	12,0 M
44	1	0	1	1	0
50	1	1	1	1	0
56	1	0	1	2	0
62	1	1	1	2	0
68	1	0	1	2	1
74	1	1	1	2	1
80	1	0	1	2	2
86	1	1	1	2	2
92	1	0	1	2	3
98	1	1	1	2	3
104	1	0	1	2	4
110	1	1	1	2	4
116	1	0	1	2	5
122	1	1	1	2	5
128	1	0	1	3	5
134	1	1	1	3	5
140	1	0	1	3	5

XH: Extra heavy insert
H: Heavy insert
M: Medium insert

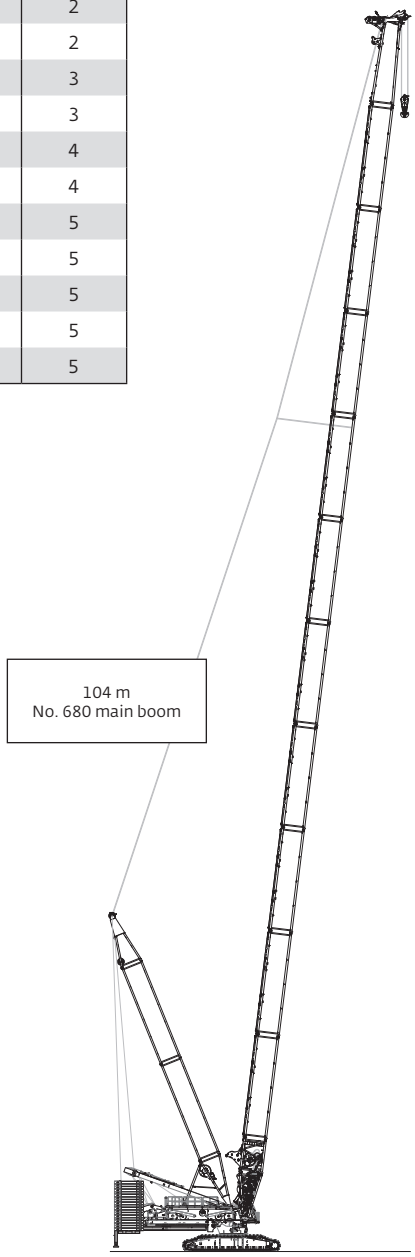

Boom combinations
VPC-MAX

No. 681-682 VPC-MAX luffing jib combinations

Luffing jib length m	Luffing jib inserts m				
	3,0	6,0	6,0*	12,0	12,0*
26	0	0	0	1	0
29	1	0	0	1	0
35	1	1	0	1	0
41	1	1	1	1	0
47	1	1	0	1	1
53	1	1	1	1	1
59	1	1	0	1	2
65	1	1	1	1	2
71	1	1	0	1	3
77	1	1	1	1	3
83	1	1	0	1	4
89	1	1	1	1	4
95	1	1	0	1	5
101	1	1	1	1	5

** Shallow inserts*

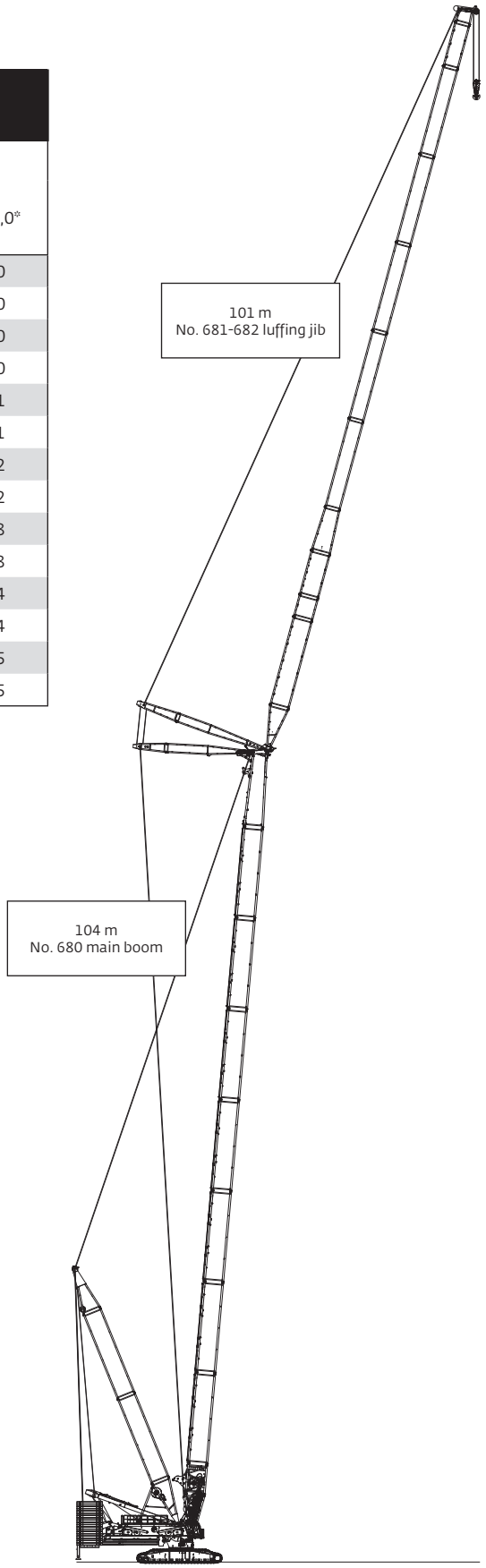

Main boom range diagram
VPC-MAX

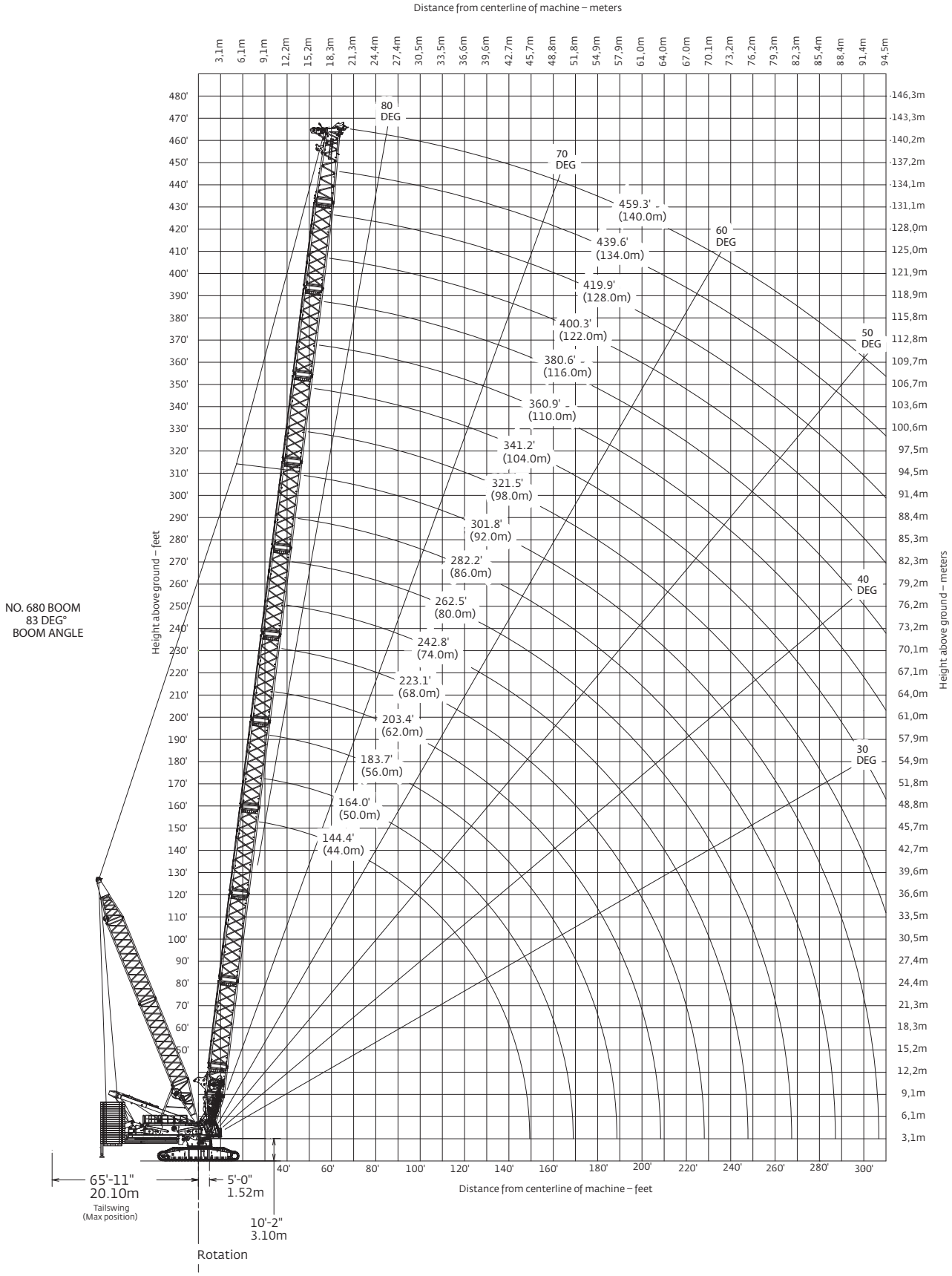

No. 680 boom VPC-MAX

400 t counterweight

360° Rating — kg x 1000

Radius m	Boom length m 44	50	56	62	68	74	80	86	92	98	104	110	116	122	128	134	140
8,53	700,0																
9	673,3																
10	641,1	609,2															
11	631,5	585,8	556,9	527,5													
12	631,5	583,3	539,3	509,5	485,1												
14	627,3	583,6	537,3	506,2	457,6	430,8	381,9	326,7									
16	568,9	566,5	537,0	506,2	459,3	424,9	381,9	326,7	272,8	238,1							
18	501,7	500,9	503,0	493,8	459,3	425,8	381,9	326,7	272,8	238,1	201,0	177,7					
20	450,4	448,9	447,7	446,0	446,5	424,8	381,9	326,7	272,8	238,1	201,0	177,7	150,0	134,4	120,3	107,7	
22	408,1	406,6	405,4	403,7	403,9	400,9	380,7	326,7	272,8	238,1	201,0	177,7	149,5	134,1	120,2	107,7	95,5
24	372,7	371,2	370,0	368,3	368,4	366,8	364,6	326,7	272,8	238,1	200,4	177,6	148,7	133,4	119,8	107,6	95,2
26	342,6	341,1	339,9	338,3	338,3	336,6	336,2	325,9	272,8	238,1	199,3	176,9	148,0	132,6	119,2	107,5	94,7
28	316,6	315,2	314,0	312,3	312,4	310,6	310,6	308,0	270,8	237,3	198,1	176,0	147,2	132,1	118,5	106,9	94,1
30	294,1	292,7	291,5	289,8	289,9	288,1	288,0	286,4	263,9	235,8	196,8	175,1	146,4	131,4	118,0	106,3	93,6
32	273,2	272,3	271,5	270,0	270,1	268,4	268,2	266,4	255,4	232,1	195,6	174,1	145,6	130,7	117,4	105,8	93,1
34	253,0	252,1	251,3	250,2	250,6	249,4	249,5	248,2	246,3	224,4	189,5	173,2	144,8	130,0	116,7	105,2	92,6
36	235,4	234,5	233,7	232,5	232,9	231,6	231,6	230,3	230,5	216,8	183,3	172,2	144,0	129,2	116,1	104,6	92,1
38	219,8	218,9	218,1	216,9	217,3	216,0	216,0	214,7	214,5	209,4	177,1	171,2	143,1	128,4	115,4	104,0	91,6
40	205,9	205,1	204,3	203,1	203,4	202,1	202,2	200,8	200,6	199,5	171,1	170,2	142,3	127,7	114,8	103,4	91,1
42	193,5	192,7	191,9	190,7	191,0	189,7	189,8	188,4	188,2	186,8	165,1	169,2	141,4	126,9	114,1	102,7	90,5
44	182,2	181,5	180,8	179,5	179,9	178,5	178,6	177,2	177,0	175,6	159,4	168,1	140,6	126,1	113,4	102,1	90,0
46		171,4	170,7	169,4	169,8	168,4	168,5	167,1	166,9	165,4	153,7	163,8	139,7	125,4	112,8	101,5	89,4
48		162,2	161,5	160,2	160,5	159,2	159,3	157,8	157,6	156,2	148,1	154,1	138,8	124,6	112,1	100,9	88,9
50			153,1	151,8	152,2	150,8	150,8	149,4	149,2	147,8	142,7	145,7	137,8	123,8	111,4	100,2	88,3
54			138,2	137,0	137,4	136,0	136,1	134,6	134,4	132,9	132,1	130,8	130,6	122,2	110,0	98,9	87,2
58				124,3	124,7	123,3	123,4	122,0	121,8	120,3	119,9	118,2	117,7	116,1	108,6	97,7	86,1
62					113,8	112,4	112,5	111,1	110,9	109,4	109,0	107,3	106,7	105,1	104,2	93,4	85,0
66					104,2	102,9	103,0	101,5	101,4	99,9	99,5	97,7	97,2	95,6	94,4	88,5	83,9
70						94,4	94,6	93,1	93,0	91,5	91,1	89,4	88,8	87,2	86,0	84,0	82,8
74							87,1	85,7	85,5	84,0	83,7	81,9	81,4	79,8	78,5	76,9	75,6
78								79,0	78,9	77,4	77,0	75,3	74,8	73,2	72,0	70,3	69,0
82								73,0	72,9	71,4	69,8	69,3	68,8	67,2	66,0	64,3	63,1
86									67,4	66,0	62,0	63,9	63,4	61,8	60,6	58,9	57,7
90										61,0	54,4	59,0	58,5	56,9	55,7	54,1	52,8
94										54,1	47,0	54,5	54,0	52,5	51,2	49,6	48,3
98											39,4	50,4	49,9	48,3	47,1	45,5	44,2
102											31,4	46,6	46,1	44,6	43,4	41,7	40,5
106												43,0	40,4	41,1	39,9	38,3	37,0
110													29,3	37,8	36,7	35,0	33,8
114														34,8	33,6	32,0	30,8
118														22,9	30,8	29,2	28,0
122															28,2	26,6	25,4
126																24,1	22,9
130																21,8	20,6
134																	18,4

Luffing jib range diagram
VPC-MAX

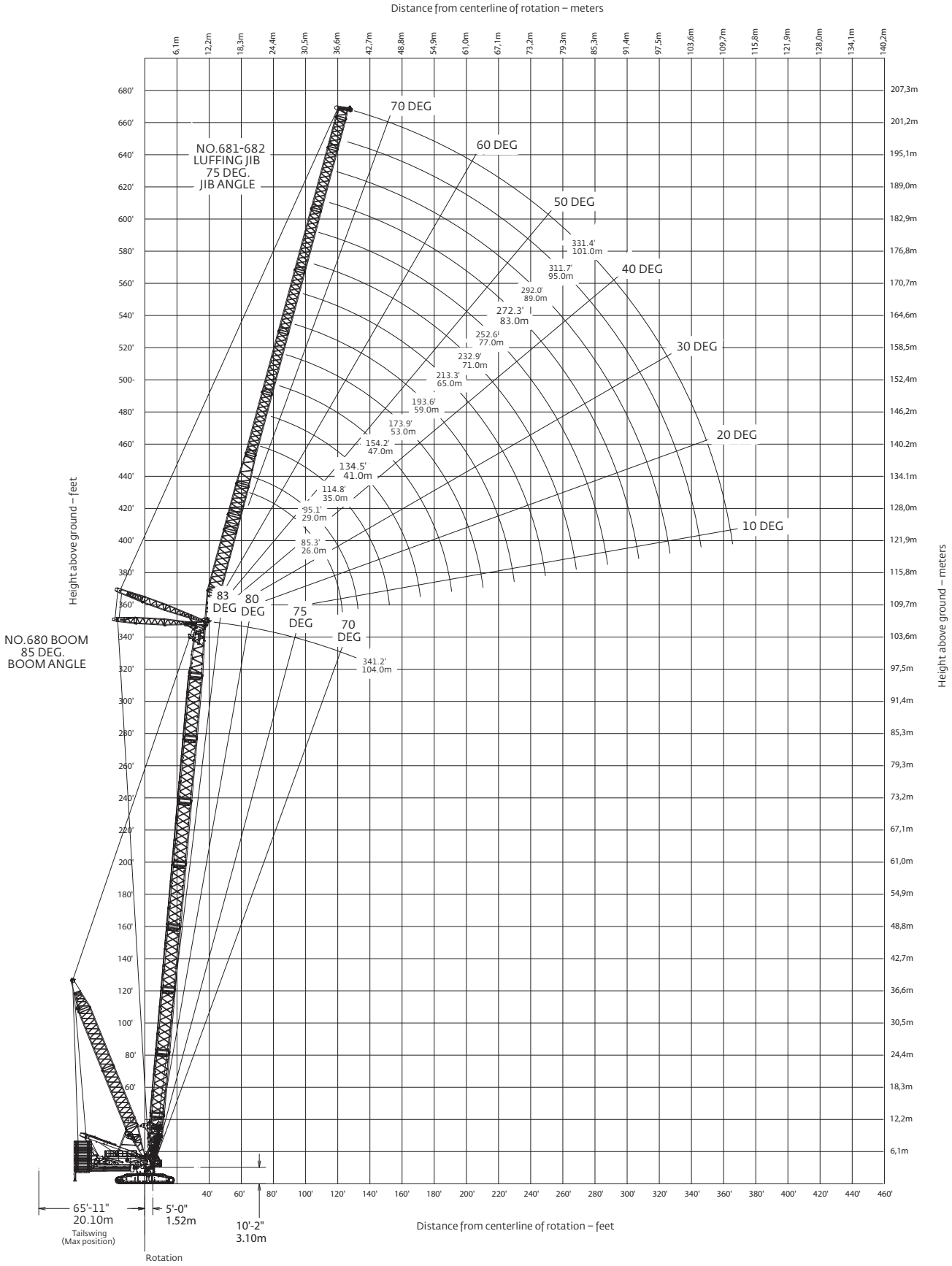

No. 681-682 luffing jib on No. 680 boom VPC-MAX

400 t counterweight

360° Rating

kg x 1000

85° boom angle

35 m luffing jib length

	Boom length m				
	56	68	80	92	104
Radius m					
20	286,3	204,2			
22	275,0	203,2	148,8	112,6	
24	263,8	197,1	147,8	108,7	85,2
26	252,9	182,0	146,0	107,7	80,5
28	240,1	168,4	143,4	106,2	79,0
30	222,7	156,9	137,6	104,5	78,0
32	206,9	147,2	130,2	102,9	76,8
34	192,5	139,2	123,5	99,8	75,7
36	179,9	132,5	117,2	95,2	74,4
38	165,3	127,3	111,7	91,1	73,2
40	138,0	123,9	107,2	87,6	70,6
42		121,1	104,2	85,0	68,4
44			103,6	83,8	67,0

59 m luffing jib length

	Boom length m				
	56	68	80	92	104
Radius m					
26	150,1	115,2			
28	150,1	115,2	89,7	69,4	
30	150,1	115,2	89,6	67,9	53,4
32	150,0	115,2	89,3	67,7	52,7
34	147,4	113,9	88,8	67,3	50,5
36	141,2	109,4	87,6	66,6	50,2
38	135,0	104,9	84,6	65,9	49,6
40	128,8	100,5	81,2	65,0	49,0
42	122,6	96,1	77,9	62,7	48,3
44	116,4	91,7	74,6	60,2	47,5
46	110,5	87,4	71,4	57,8	45,9
48	104,8	83,3	68,3	55,6	44,2
50	99,4	79,4	65,4	53,3	42,5
52	94,4	75,8	62,6	51,2	40,9
54	89,7	72,4	60,0	49,3	39,4
56	85,5	69,3	57,6	47,4	38,0
58	81,7	66,5	55,4	45,7	36,7
60	78,4	64,0	53,6	44,3	35,6
62	75,7	62,0	52,0	43,0	34,6
64	73,2	60,6	50,8	42,0	33,8
66		60,1	50,2	41,4	33,2
68				41,3	33,0
70					33,1

For complete chart, refer to www.cranelibrary.com.

Luffing jib load charts
VPC-MAX

No. 681-682 luffing jib on No. 680 boom VPC-MAX

400 t counterweight

360° Rating

kg x 1000

85° boom angle

77 m luffing jib length

	Boom length m				
	56	68	80	92	104
Radius m					
30	92,1				
32	92,1	75,1			
34	91,9	75,1	60,7	47,5	36,2
36	91,7	74,9	60,7	47,4	36,0
38	91,4	74,7	60,5	47,2	35,0
40	91,1	74,5	60,3	47,0	34,7
42	90,8	74,1	60,0	46,7	34,4
44	90,4	72,7	58,8	46,3	34,0
46	89,1	70,5	57,0	45,2	33,6
48	86,1	68,2	55,2	43,8	33,3
50	83,1	65,9	53,3	42,3	32,6
52	80,1	63,6	51,5	40,9	31,5
54	77,1	61,2	49,7	39,5	30,4
56	74,2	59,0	47,9	38,1	29,4
58	71,3	56,7	46,1	36,8	28,3
60	68,5	54,6	44,5	35,5	27,4
62	65,8	52,5	42,8	34,2	26,4
64	63,2	50,5	41,3	33,0	25,5
66	60,7	48,6	39,8	31,8	24,6
68	58,4	46,9	38,4	30,8	23,8
70	56,2	45,3	37,1	29,8	23,0
72	54,2	43,7	35,9	28,8	22,3
74	52,4	42,3	34,8	28,0	21,6
76	50,8	41,2	33,9	27,2	21,1
78	49,4	40,1	33,1	26,6	20,6
80	48,4	39,3	32,4	26,1	20,1
82	44,8	38,9	32,0	25,8	19,8
84		38,7	32,0	25,6	19,7
86				25,6	19,7
88					19,7

101 m luffing jib length

	Boom length m				
	56	68	80	92	104
Radius m					
36	49,1				
38	48,9	40,7			
40	48,6	40,6	34,3	27,5	20,6
42	48,2	40,5	34,3	27,5	20,5
44	48,0	40,3	34,2	27,4	20,4
46	47,7	40,1	34,0	27,3	20,3
48	47,4	39,9	33,9	27,1	20,2
50	47,0	39,7	33,7	27,0	19,9
52	46,7	39,5	33,5	26,8	19,5
54	46,3	39,3	33,4	26,2	19,0
56	46,0	39,1	33,1	25,6	18,4
58	45,7	38,9	32,3	24,9	17,8
60	45,4	38,6	31,6	24,2	17,3
62	45,1	38,2	30,7	23,5	16,7
64	44,8	37,3	29,9	22,8	16,1
66	44,5	36,4	29,1	22,2	15,6
68	44,2	35,4	28,2	21,5	15,1
70	43,3	34,4	27,4	20,8	14,5
72	42,1	33,5	26,6	20,1	14,0
74	41,0	32,5	25,8	19,4	13,4
76	39,9	31,6	25,0	18,8	12,9
78	38,8	30,7	24,3	18,2	12,4
80	37,7	29,8	23,5	17,6	12,0
82	36,7	29,0	22,8	17,1	11,5
84	35,6	28,1	22,2	16,5	11,1
86	34,6	27,3	21,5	16,0	10,7
88	33,7	26,6	20,9	15,5	10,3
90	32,8	25,9	20,3	15,0	10,0
92	32,0	25,2	19,8	14,6	9,6
94	31,2	24,6	19,3	14,2	9,3
96	30,5	24,1	18,9	13,9	9,1
98	29,9	23,6	18,5	13,6	8,8
100	29,3	23,2	18,2	13,4	8,6
104	25,0	22,7	17,8	13,0	8,4
108	14,8	19,1	17,8	13,0	8,3

For complete chart, refer to www.cranelibrary.com.

Manitowoc Crane Care

Manitowoc Crane Care is the industry's most advanced service and support program, designed to keep your cranes up and running. Manitowoc's distributor network and customer support personnel are available to support you 24 hours a day, 7 days a week, 365 days a year. There are five key disciplines of Manitowoc Crane Care:

Parts
Genuine Manitowoc replacement parts are accessible through your distributor.

Service and technical support
Assistance with crane selection, lift planning and ground bearing calculations or field service and maintenance.

Technical publications
Operator, parts, service and capacity chart manuals are available in multiple formats in major languages.

Training
A variety of training courses are available online or through Manitowoc training centers.

EnCORE
Rebuild, repair, remanufacture or exchange your current crane through our local network, for a fraction of the cost of a new crane.

www.manitowoccranecare.com

CraneSTAR

CraneSTAR is an exclusive and innovative crane asset management system that helps improve your profitability and reduce costs by remotely monitoring critical crane data. Visit www.cranestar.com for more information.

Manitowoc Cranes

Regional headquarters

Americas
Manitowoc, Wisconsin, USA
Tel: +1 920 684 6621
Fax: +1 920 683 6277

Shady Grove, Pennsylvania, USA
Tel: +1 717 597 8121
Fax: +1 717 597 4062

Europe, Middle East, Africa
Ecully, France
Tel: +33 (0)4 72 18 20 20
Fax: +33 (0)4 72 18 20 00

China
Shanghai, China
Tel: +86 21 6457 0066
Fax: +86 21 6457 4955

Greater Asia-Pacific
Singapore
Tel: +65 6264 1188
Fax: +65 6862 4040

Regional offices

Americas
Brazil
Alphaville
Mexico
Monterrey
Chile
Santiago

Europe, Middle East, Africa
Czech Republic
Netvorice
France
Baudemont
Cergy
Decines
Germany
Langenfeld
Hungary
Budapest
Italy
Lainate
Netherlands
Breda
Poland
Warsaw
Portugal
Baltar
Russia
Moscow
South Africa
Johannesburg
U.A.E.
Dubai
U.K.
Buckingham

China
Beijing
Chengdu
Guangzhou
Xian

Greater Asia-Pacific
Australia
Brisbane
Melbourne
Sydney
India
Chennai
Delhi
Hyderabad
Pune
Korea
Seoul
Philippines
Makati City
Singapore

Factories

Brazil
Passo Fundo
China
TaiAn
Zhangjiagang
France
Charlieu
Moulins
Germany
Wilhelmshaven
India
Pune
Italy
Niella Tanaro
Portugal
Baltar
Fânzeres
Slovakia
Saris
USA
Manitowoc
Port Washington
Shady Grove

This document is non-contractual. Constant improvement and engineering progress make it necessary that we reserve the right to make specification, equipment, and price changes without notice. Illustrations shown may include optional equipment and accessories and may not include all standard equipment.

©2014 Manitowoc
0514-MLC650 PG-US-E-ASME-Imperial